GUARD POST / BUMPER CURBS

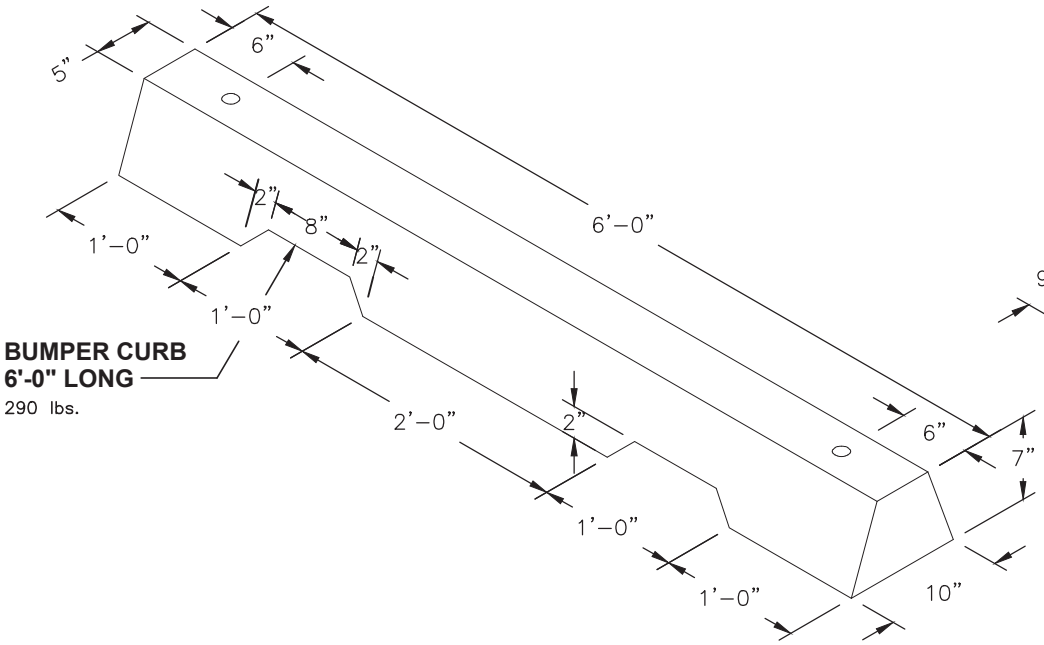

BUMPER CURB
6'-0" LONG
290 lbs.

GUARD POST
6'-0" LONG
400 lbs.

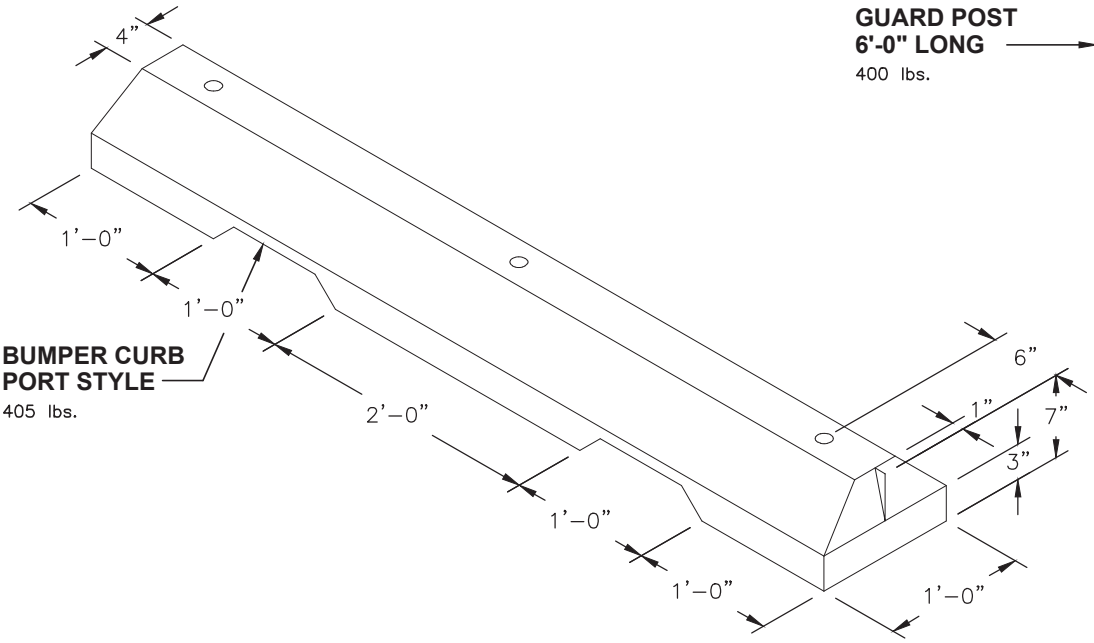

BUMPER CURB
PORT STYLE
405 lbs.

Items Shown Are Subject To Change Without Notice
Issue Date: April 2016

© 1980-2016 Oldcastle Precast, Inc.

Mailing Address
PO Box 588
Auburn, WA 98071

Phone: 800-892-1538
Fax: 253-735-4201
Email: opauburn@oldcastle.com

opauburn.com