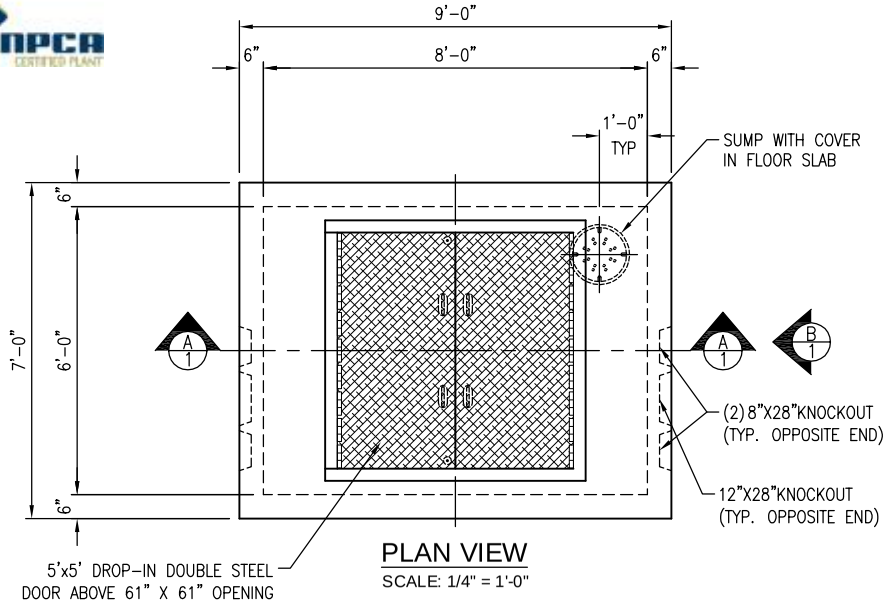

PLAN VIEW

SCALE: 1/4" = 1'-0"

GENERAL DESIGN NOTES:

1. STRENGTH DESIGN METHOD I.A.W. ACI 318
2. APPLICABLE DESIGN CODES:
   - ACI 318 (MAIN DESIGN SPECIFICATION)
   - ASTM C913 (PRODUCT SPECIFICATION)
3. PRECAST RATED FOR HS20 LIVE LOAD W/ IMPACT I.A.W. AASHTO SPECIFICATION
4. DESIGN FILL RANGE = 0'(MIN) TO 2'(MAX)
5. GROUND WATER TABLE ASSUMED AT 5' BELOW GRADE. IF DESIGN (OR ACTUAL) WATER TABLE IS LESS THAN ASSUMED, REVIEWING ENGINEER TO NOTIFY OLDCASTLE PRECAST UPON REVIEW OF THIS SUBMITTAL.
6. LATERAL DESIGN PRESSURES:
   - EQUIV DRY SOIL FLUID PRESSURE = 47 PCF
   - EQUIV SATURATED SOIL FLUID PRESSURE = 80 PSF
   - LIVE LOAD SURCHARGE PRESSURE = 2'
7. CONCRETE COMPRESSIVE STRENGTH AT 28 DAYS = 5,000 PSI.
8. REINFORCEMENT: ASTM A615, GRADE 60.
9. JOINT SEALANT: BUTYL RUBBER, SS-0100210
10. THESE CALCULATIONS DO NOT INCLUDE ANY LATERAL OR SURCHARGE LOADS PRODUCED BY OTHER FOOTINGS OR FOUNDATIONS ADJACENT TO THIS STRUCTURE. THIS STRUCTURE SHALL BE KEPT A MINIMUM OF 1:1 RATIO AWAY FROM OTHER FOOTINGS OR FOUNDATIONS.

NOTE TO REVIEWING ENGINEER:

1. SUPPLY AND INSTALL ALL PIPING AND SAMPLING TEES.
2. DESIGN, AS SHOWN HEREIN, IS APPLICABLE ONLY TO STRUCTURAL PERFORMANCE OF PRECAST. CAPACITY (GALLONS) SHALL BE DETERMINED BY OTHERS BASED ON SPECIFIC PROJECT REQUIREMENT

NOTE TO CONTRACTOR:

1. SUPPLY AND INSTALL ALL PIPING AND SAMPLING TEES.
2. GROUT IN ALL PIPES AND WEIRS.
3. FILL WITH CLEAN WATER PRIOR TO "START UP" OF SYSTEM.
4. VERIFY SIZE AND LOCATION OF ALL OPENINGS.

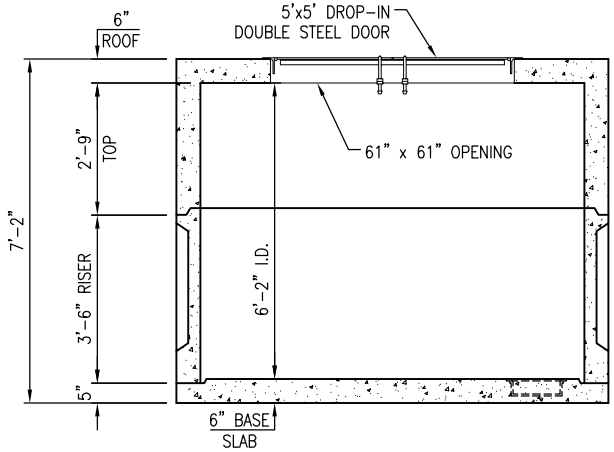

SECTION A-A

SCALE: 1/4" = 1'-0"

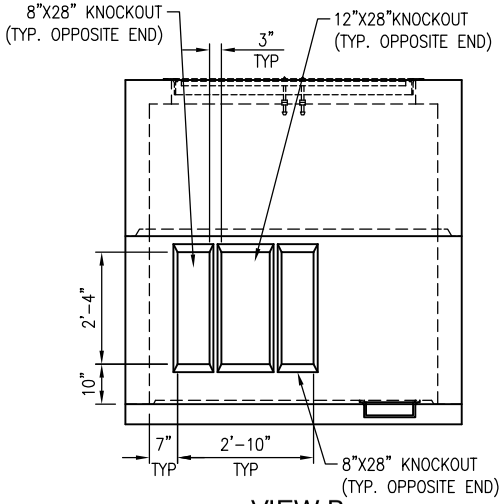

VIEW B

SCALE: 1/4" = 1'-0"

INFORMATION NEEDED:

1. TOP OF SEPARATOR ELEVATION _____
2. INLET PIPE SIZE _____
3. INLET PIPE ELEVATION _____
4. OUTLET PIPE SIZE _____
5. OUTLET PIPE ELEVATION _____

APPROX. WEIGHTS

SECTION	WEIGHT (lbs)	Concrete(CY)
SLAB FLOOR	4,800	1.19
42" RISER	7,900	1.95
33" TOP	9,100	2.25

Oldcastle Precast®
4905 STOUGH RD. CONCORD, NC
OFFICE 704-788-4050, FAX 704-788-4060
NC ENGINEERING LICENSE #F-1002

THIS DOCUMENT IS THE PROPERTY OF OLDCASTLE PRECAST, INC. IT IS CONFIDENTIAL, SUBMITTED FOR REFERENCE PURPOSES ONLY, AND SHALL NOT BE USED IN ANY WAY INJURIOUS TO THE INTERESTS OF, OR WITHOUT THE WRITTEN PERMISSION OF OLDCASTLE PRECAST, INC. COPYRIGHT © 2017 OLDCASTLE PRECAST, INC ALL RIGHTS RESERVED

6'-0" x 8'-0" x 6'-2" METER VAULT

SUBMITTAL LAYOUT

CUSTOMER

DATE	SALES	DRAWN	ENGINEER	CHECKED	SALES ORDER
6/5/17					

DRAWING NUMBER	REVISION	SHEET
6x8x6.17 Meter Vault	REV DATE	1 OF 1

REVISIONS

REV	DATE	BY	SHEET	DESCRIPTION OF REVISION	REQUESTED BY
A					
B					
C					
D					

THIS MUST BE FILLED OUT BEFORE MANUFACTURING BEGINS

APPROVED W/ NO EXCEPTIONS TAKEN: ☐

APPROVED AS NOTED: ☐

REVISED AND RESUBMIT: ☐

SIGNATURE DATE