1'-5" x 1'-10" x 1'-4" ID Electrical Vault

Model: 1824-LA

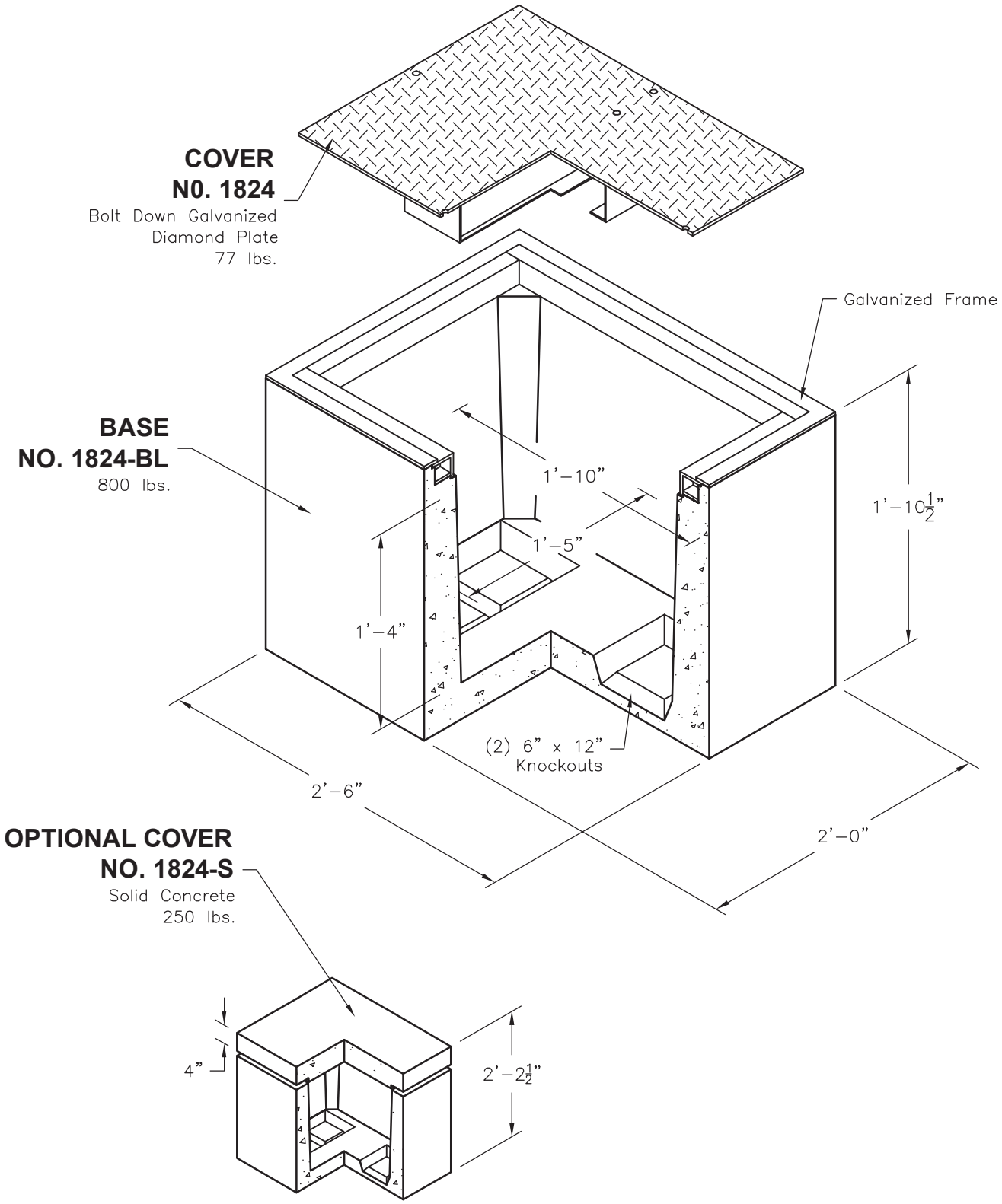

© 2015 Oldcastle Precast, Inc.