2'-0" x 3'-0" x 1'-4" ID Electrical Vault

Model: 233-LA

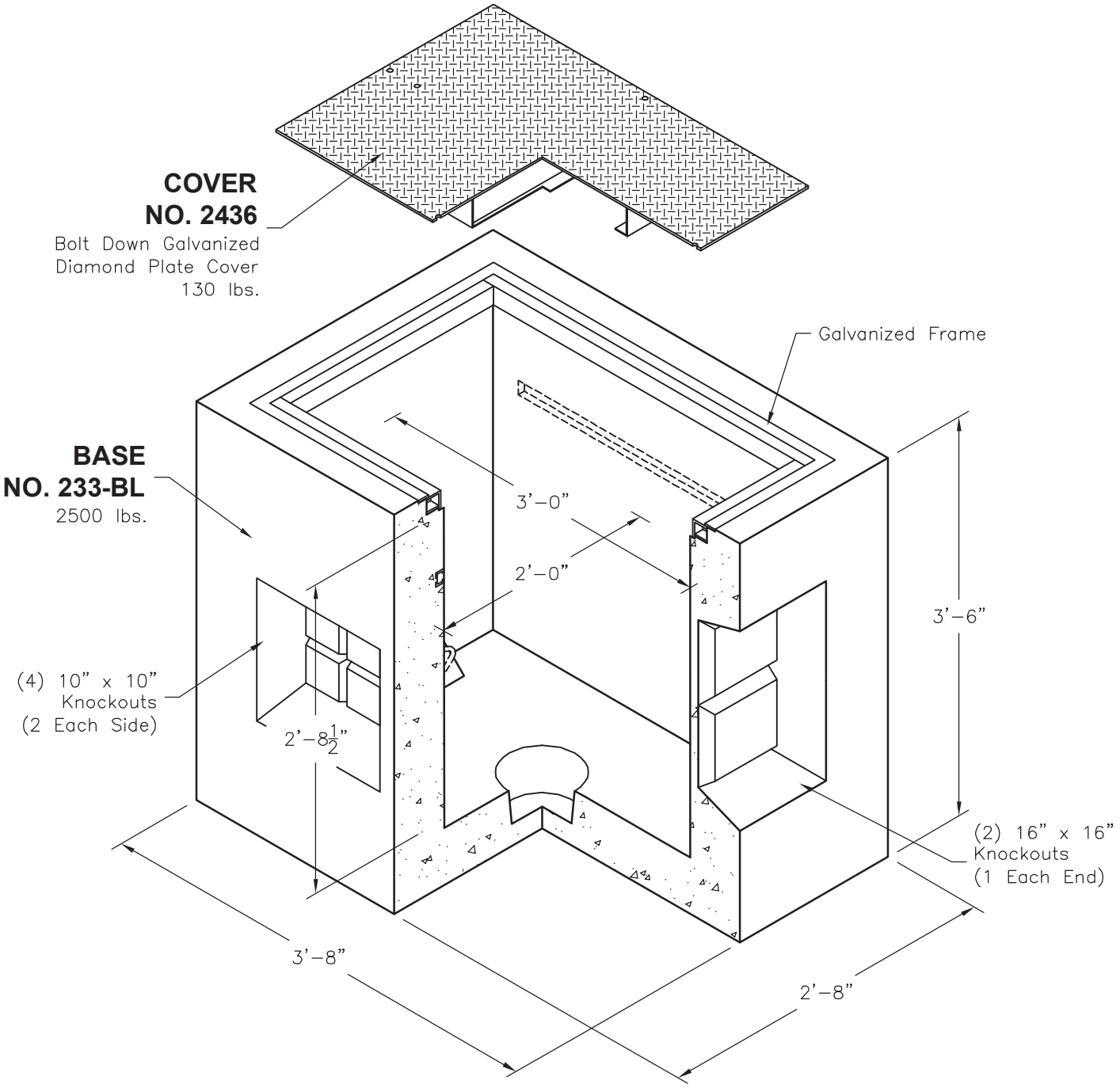

© 2015 Oldcastle Precast, Inc.