REV	DESCRIPTION	BY	DATE
A	Removed Ducts K.O. And Pulling Irons on Side Wall	AT	2/19/04
B	Changed Sump To 5" Deep	AT	5/4/06
C	Change of Title-Template & Notes	JS	2/6/08
D	Added Hook Lifts	AT	11/13/09
E	Increased Max Depth Capacity	AT	8/18/10
F	Added Dimensions and Notes In End View	AT	8/18/10
G	CHANGED WATER TABLE TO BELOW VAULT	AT	3/8/11

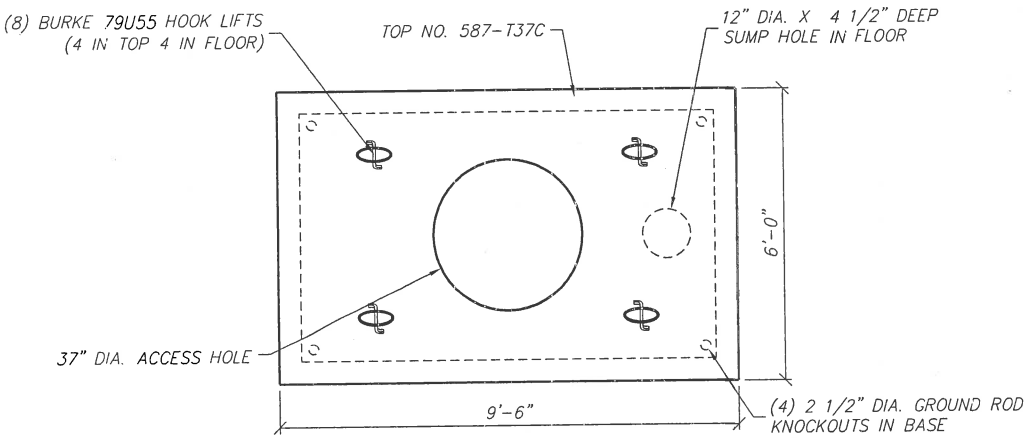

PLAN VIEW

SCALE: 1/4" = 1'-0"

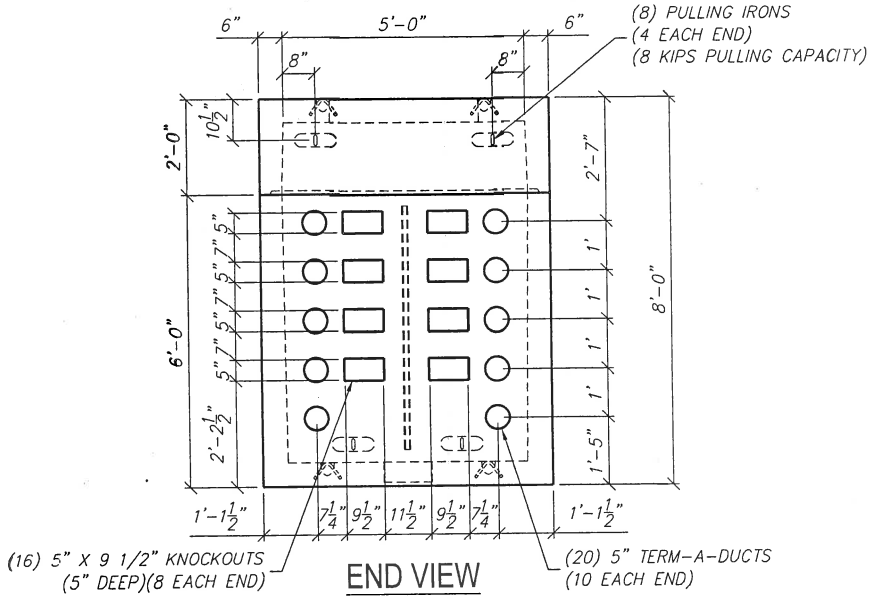

END VIEW

SCALE: 1/4" = 1'-0"

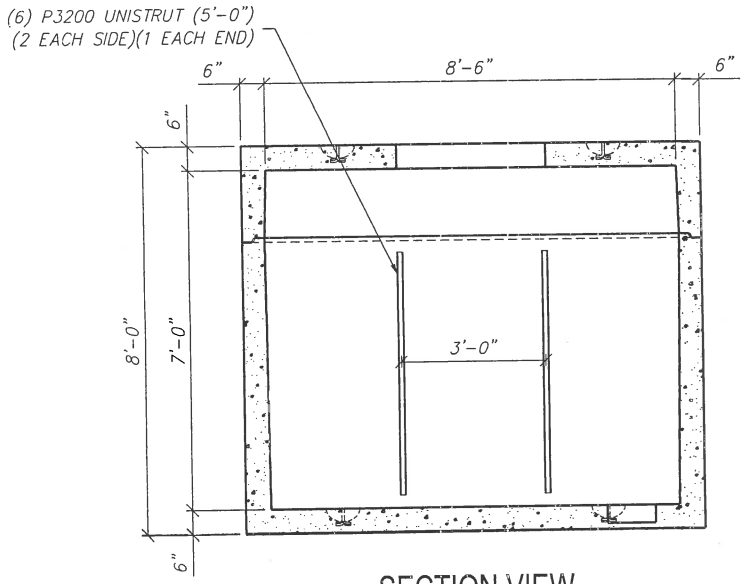

SECTION VIEW

SCALE: 1/4" = 1'-0"

STRUCTURAL NOTES

1. CONCRETE: 28 DAY COMPRESSIVE STRENGTH f'c = 7,000 psi
2. REBAR: ASTM A-615 GRADE 60
3. MESH: ASTM A-185 GRADE 65
4. DESIGN: ACI 318-08 BUILDING CODE
   ASTM C-857 "MINIMUM STRUCTURAL DESIGN LOADING FOR UNDERGROUND PRECAST CONCRETE UTILITY STRUCTURES"
5. LOADS: HS20-44 W/30% IMPACT PER AASHTO
   80 PSF LATERAL LIVE LOAD SURCHARGE - UP TO 8'-0" DEPTH
   SOIL: 40 PCF LATERAL SOIL PRESSURE ABOVE WATER TABLE
   120 PCF SOIL DENSITY
6. SOIL COVER: 0' TO 11' (MAX.)
7. WATER TABLE: BELOW VAULT

GENERAL NOTES

1. ALL JOINTS SHAL BE SEALED USING CONSEAL CS-101 BUTYL RUBBER ROPE.

Oldcastle Precast®
411 E. FRYE RD. CHANDLER, AZ 85225
PHONE: (480) 963-2678 FAX: (480) 899-1937

THIS DOCUMENT IS THE PROPERTY OF OLDCASTLE PRECAST, INC. IT IS SUBMITTED FOR REFERENCE PURPOSES ONLY AND SHALL NOT BE USED IN ANY WAY INJURIOUS TO THE INTERESTS OF SAID COMPANY. COPYRIGHT © 2010 OLDCASTLE PRECAST, INC. ALL RIGHTS RESERVED.

587-LA

ELECTRICAL VAULT

CUSTOMER

STANDARD LAYOUT

DATE	SALES	DRAWN	ENGINEER	CHECKED	SALES ORDER
4/9/07		JS	FS	3-9-11	---
DRAWING NUMBER				REVISION	SHEET
v36l1-1				G REV DATE 3/8/11	1 OF 1