Oldcastle Precast®

WATER/WASTEWATER

5'-0" x 10'-6" x 5'-0" ID
Water Meter Vault
Model: 5106 WA

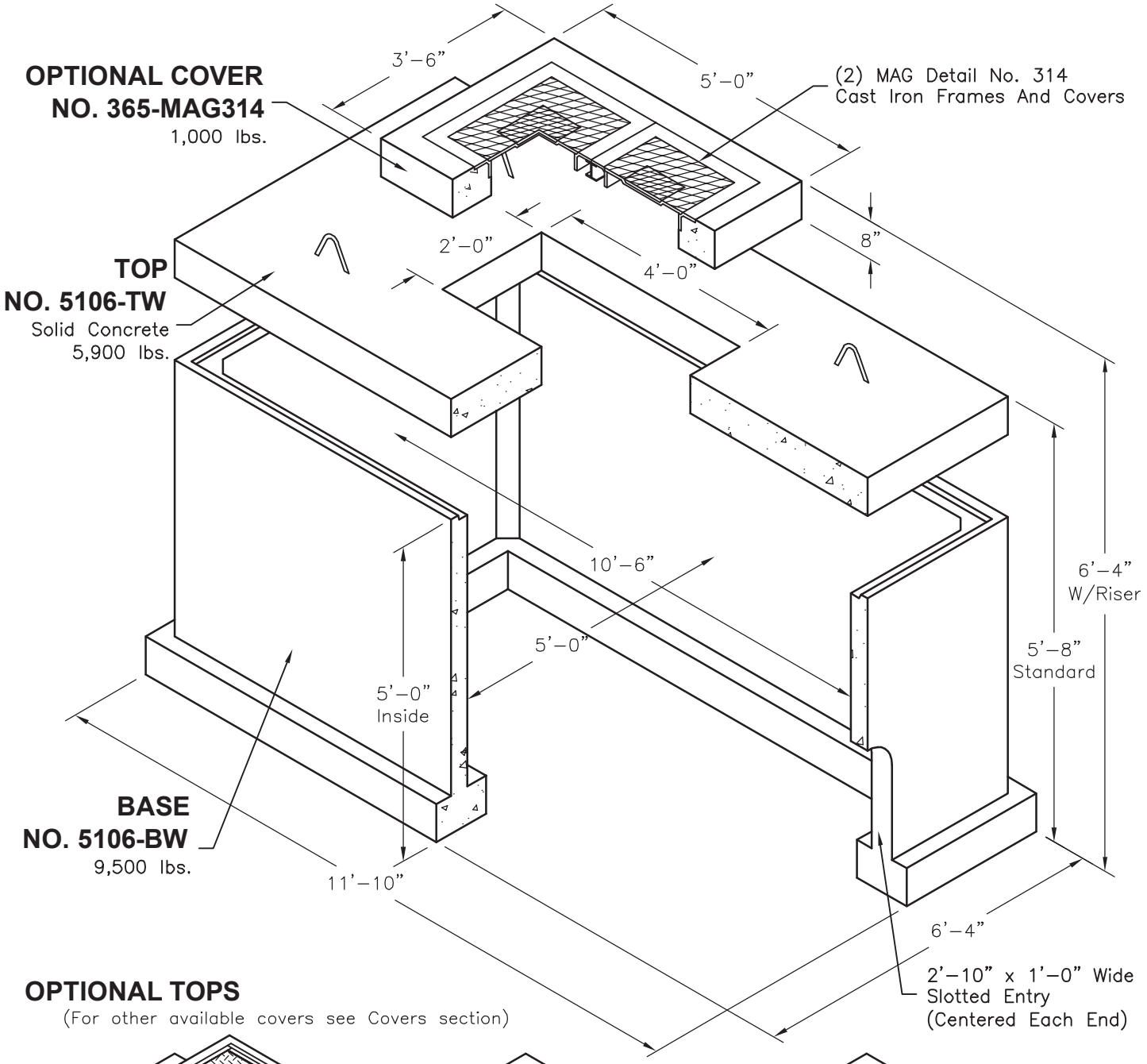

OPTIONAL TOPS

(For other available covers see Covers section)

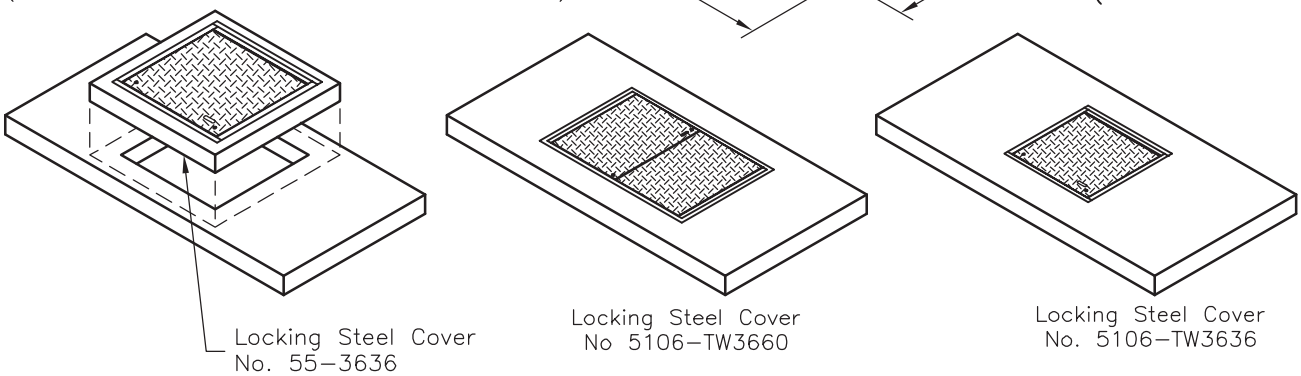

Oldcastle Precast
Chandler, AZ Division
Phone: (480) 963-2678

For more information about our products please visit us on the web at:
oldcastleprecast.com/chandler

© 2015 Oldcastle Precast, Inc.

411 E. Frye Rd.
Chandler, AZ 85225