H20 3,000 gal.

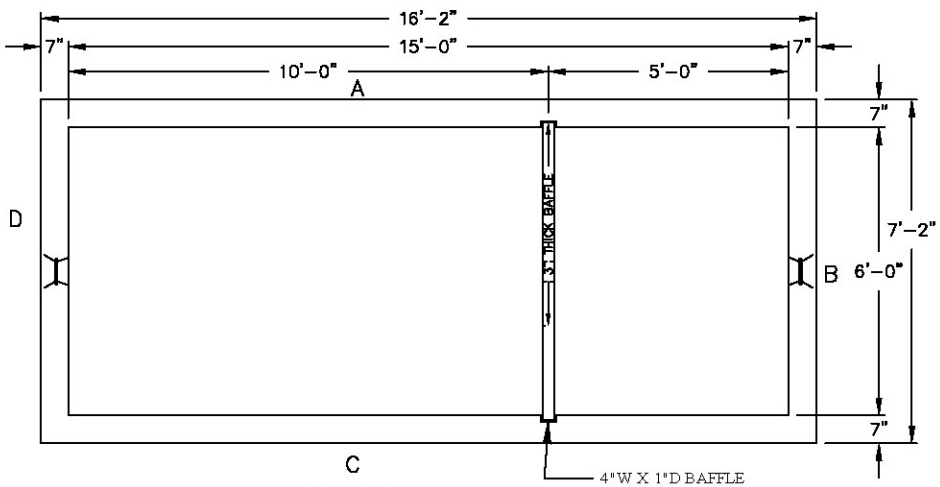

PLAN VIEW

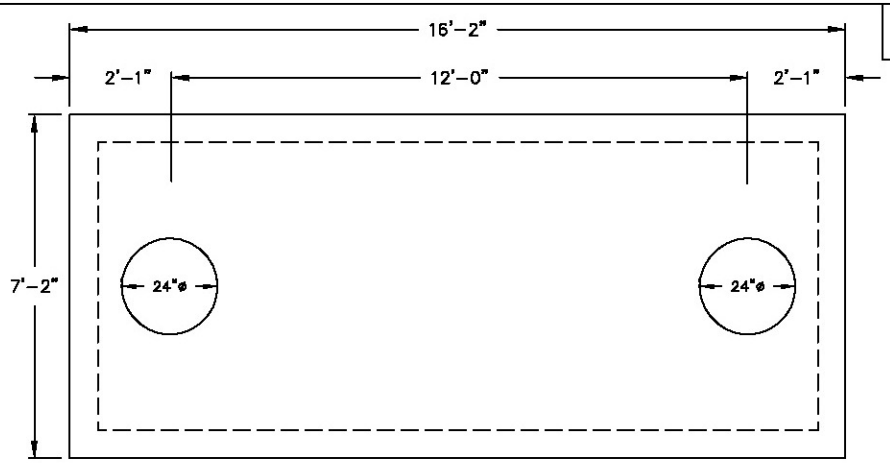

MONO - TOP DETAIL

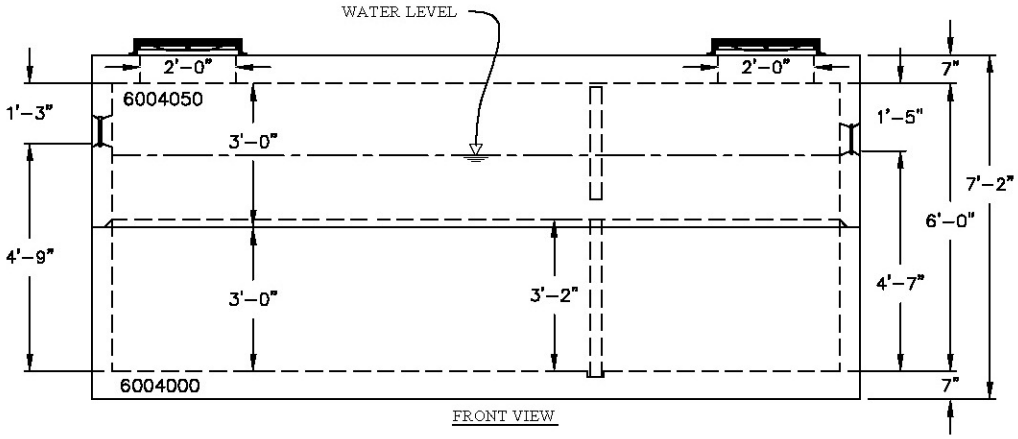

FRONT VIEW

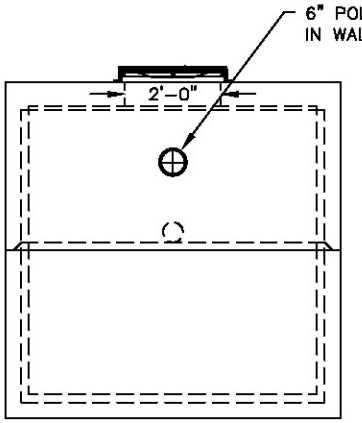

SIDE VIEW

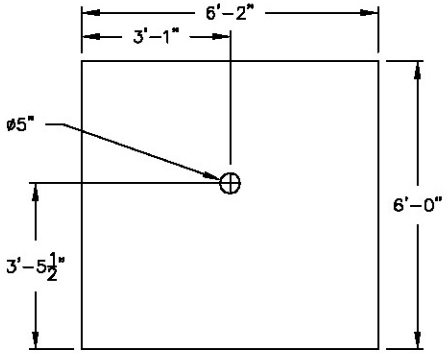

3" THICK BAFFLE DETAIL

6004100

NOTES:
1. CONCRETE: 28 DAY COMP. STRENGTH F'C = 4,000 PSI.
2. PRECAST STRUCTURES ARE PRODUCED TO MEET OR EXCEED ASTM SPECIFICATIONS
3. SUPPORTS AN H20 LOADING AS INDICATED BY AASHTO.
4. CONTRACTOR TO VERIFY SIZE AND LOCATION OF ALL OPENINGS.
5. ALL INTERNAL PIPING DONE BY OTHERS – NOT OLD CASTLE

PROPERTY OF OLDCASTLE PRECAST, NOT TO BE REPRODUCED WITHOUT WRITTEN CONSENT.2005 ©

WALLS	PIPE SIZE	PIPE INVERT	HOLE SIZE	HOLE UP	PRODUCTION YARDAGE		WEIGHTS	REINFORCEMENT
B	--	+4.58	6" RUBBER BOOT	4'-7"	BASE:			
D	--	+4.95	6" RUBBER BOOT	4'-9"	WALL:			
					TOP:			
BAFFLE	--	+3.17	5"ø	3'-2"	BAFFLE:			
REMARKS:					CASTING:			
					STEEL WT.:		CONC WT.:	

STRUCTURE TYPE – 3000 GALLON GREASE TRAP – 72"X180"X72" (H20 RATED)

Oldcastle™ Precast Inc.
690 WEST TAFT-VINELAND RD. ORLANDO FL 32824
(407) 855-7580 • FAX: (407) 855-2424

DRAWN: RENE		DATE: 02/28/07	
CHECKED:		DATE:	
PRODUCED:		SHIPPED:	
STR. NO.: 3,000gal	S.O. NO.: 00000		LN. NO.:
DRAWING NO.:			LOC.:
SCALE: 1"=4'	SHEET: 1 OF 1		

CONTRACTOR

PROJECT