48X78X54
PULL BOX

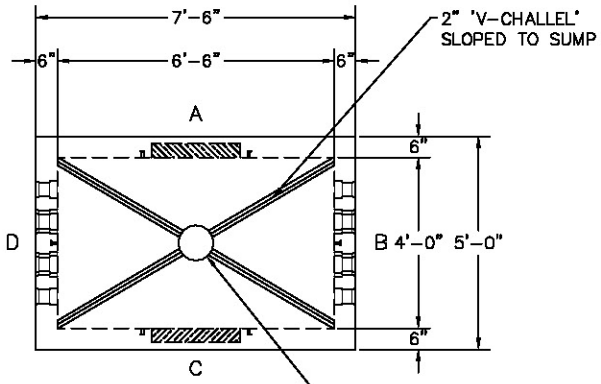

BASE SECTION
PLAN VIEW

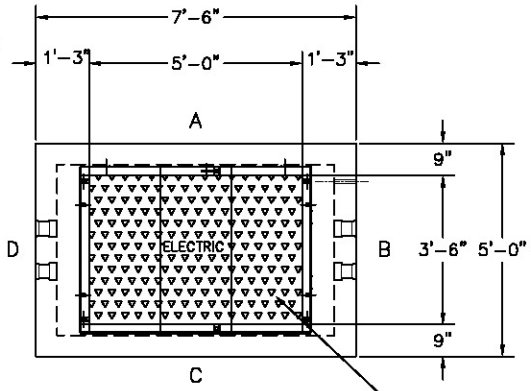

TOP SECTION
PLAN VIEW

42X60 GALVANIZED TORSION FRAME AND COVER – HS-20 HD RATED

NOTES:

1. CONCRETE: 28 DAY COMPRESSIVE STRENGTH f'c=4,000 psi.
2. REINEFORCING: ASTM A-615, GRADE 60
3. CONTACTOR TO VERIFY SIZE AND LOCATION OF ALL OPENINGS
4. FRAME AND COVER TO BE HS-20 LOAD RATED

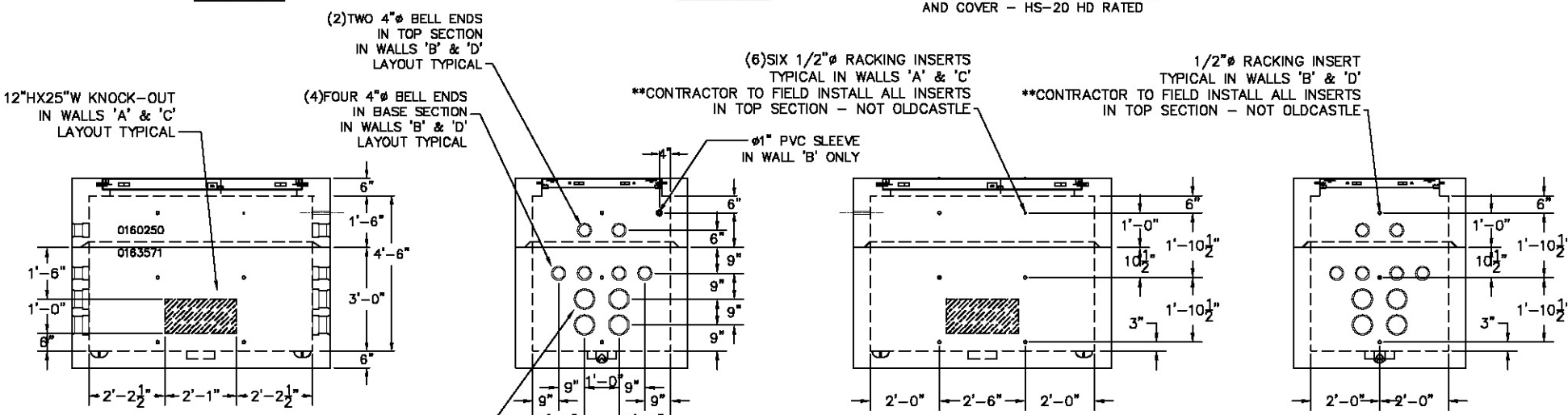

PROPERTY OF OLDCASTLE PRECAST, NOT TO BE REPRODUCED WITHOUT WRITTEN CONSENT.2005 ©

WALLS						PRODUCTION YARDAGE	WEIGHTS	REINFORCEMENT
					BASE:			
					WALL:			
					TOP:			
					WALL:			
					LID:			
					CASTING:			
REMARKS:					HATCH:	0160250	--	42X60 TORSION ASSIST
					STEEL WT.:		CONC WT.:	

STRUCTURE TYPE "48"X78"X54" LAKELAND PULL BOX W/ 42"X60" TORSION FR/CVR"

Oldcastle™ Precast Inc.
690 WEST TAFT-VINELAND RD. ORLANDO FL 32824
(407) 855-7580 • FAX: (407) 855-2424

DRAWN: SJW		DATE: 12/26/07	
CHECKED:		DATE:	
PRODUCED:		SHIPPED:	
STR. NO.: XX	S.O. NO.: 00000		LN. NO.:
DRAWING NO.:			LOC.:
SCALE: 1"=54"	SHEET: 1 OF 1		

CONTRACTOR

PROJECT