# 7'-0" x 8'-0" x 6'-0" Vault

**Model: 3", 4", & 6" Meters**

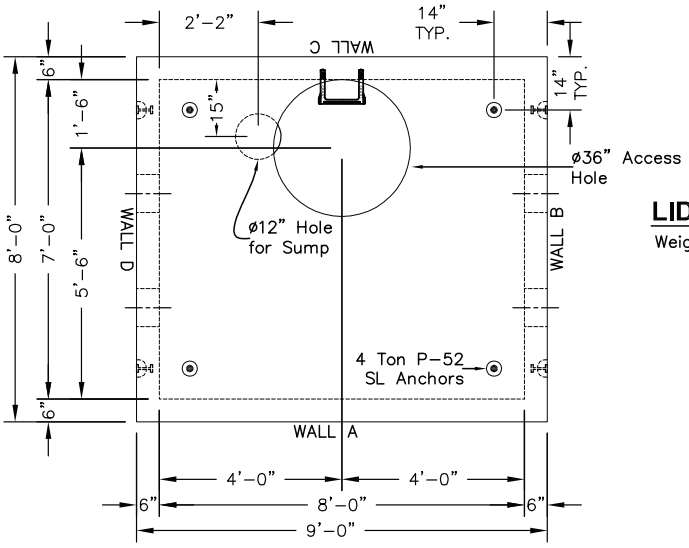


**Plan View**

**LID SECTION**

Weight=4,870 lbs.

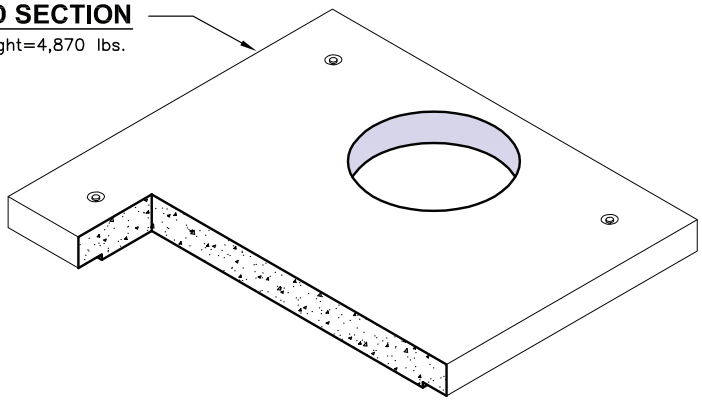

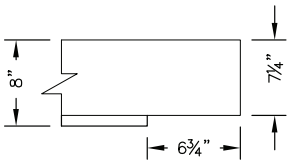


**Non-Skid Lid Detail**

**BASE SECTION**

Weight = 19,741 lbs.
± 40 lbs.

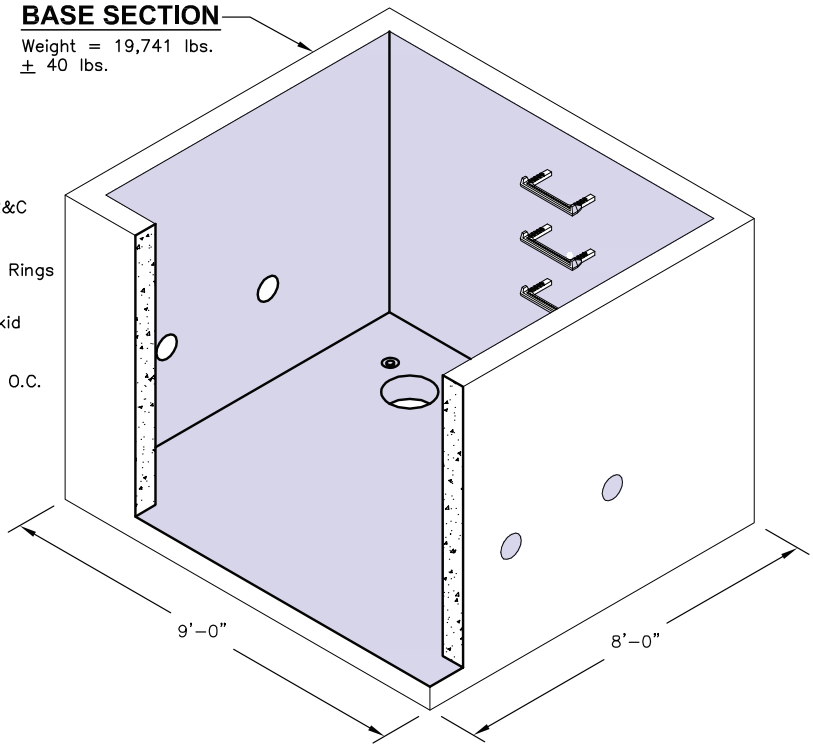


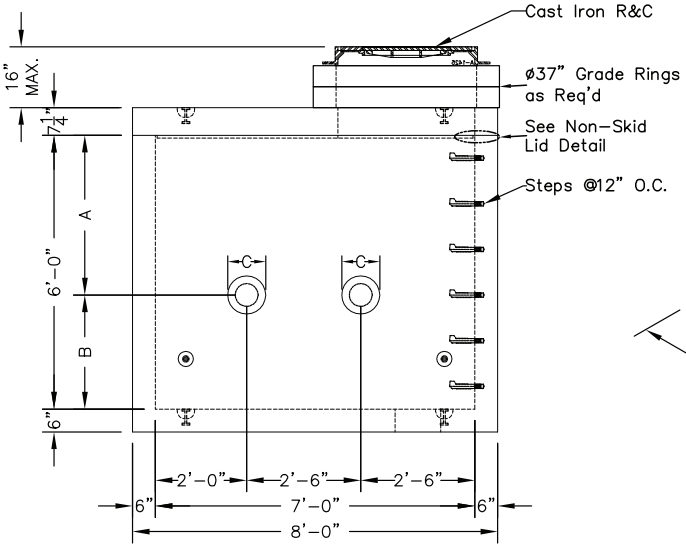


**Wall B**

Wall D is a Mirror Image

| Meter Size | 3" Meter | 4" Meter | 6" Meter |
|---|---|---|---|
| A | 4'-0" | 3'-6" | 3'-6" |
| B | 2'-0" | 2'-6" | 2'-6" |
| C | ø6" | ø8" | ø10" |


© 2013 Oldcastle Precast, Inc.