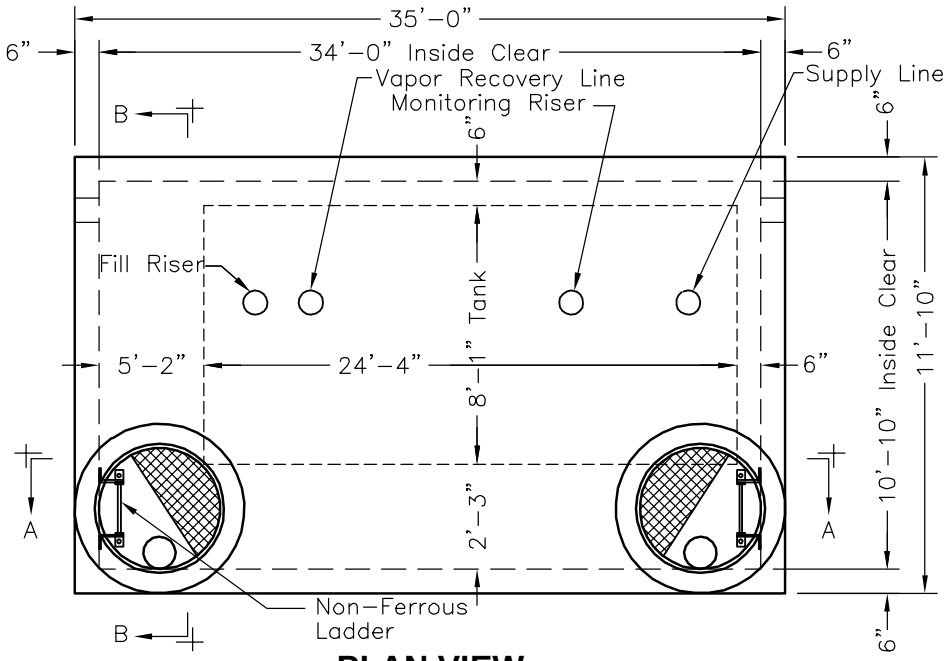

PLAN VIEW

NOTES:
Penetrations Shown Here are for Illustration Purposes Only. Actual Penetrations Required, and Their Locations, Will Vary According to Customer Needs.

GENERAL NOTES:

1. Concrete: 28 Day Compressive Strength f'c = 5,000 psi
2. Steel Reinforcement: ASTM A–615, Grade 60
3. Cover to Steel–1" Minimum
4. Vaults are Designed to Meet ASTM C857 and ACI 318 with AASHTO HS–20 Loading
5. Construction Joint Sealed with Fuel Resistant Gasket Material CS–440

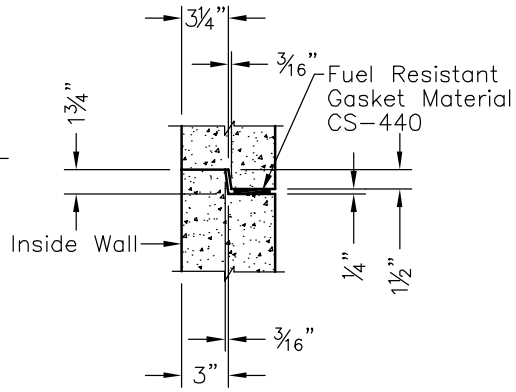

DETAIL "1"

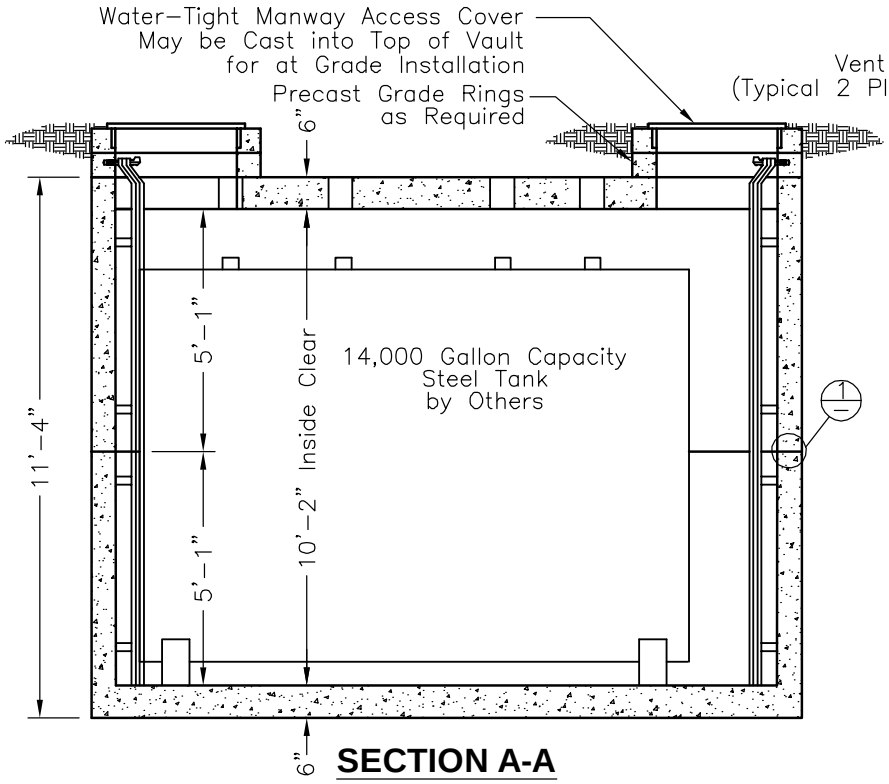

SECTION A-A

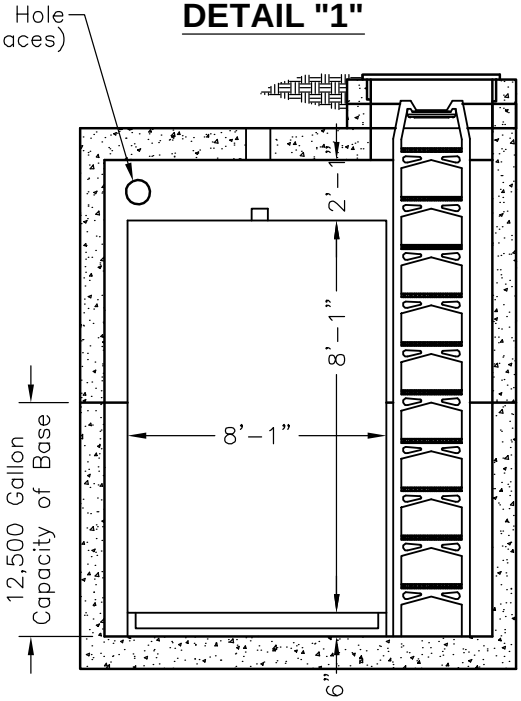

SECTION B-B

© 2013 Oldcastle Precast, Inc.