NOTE: 2EA. GROUND-ROD KNOCK-OUTS NOT SHOWN

MID-1

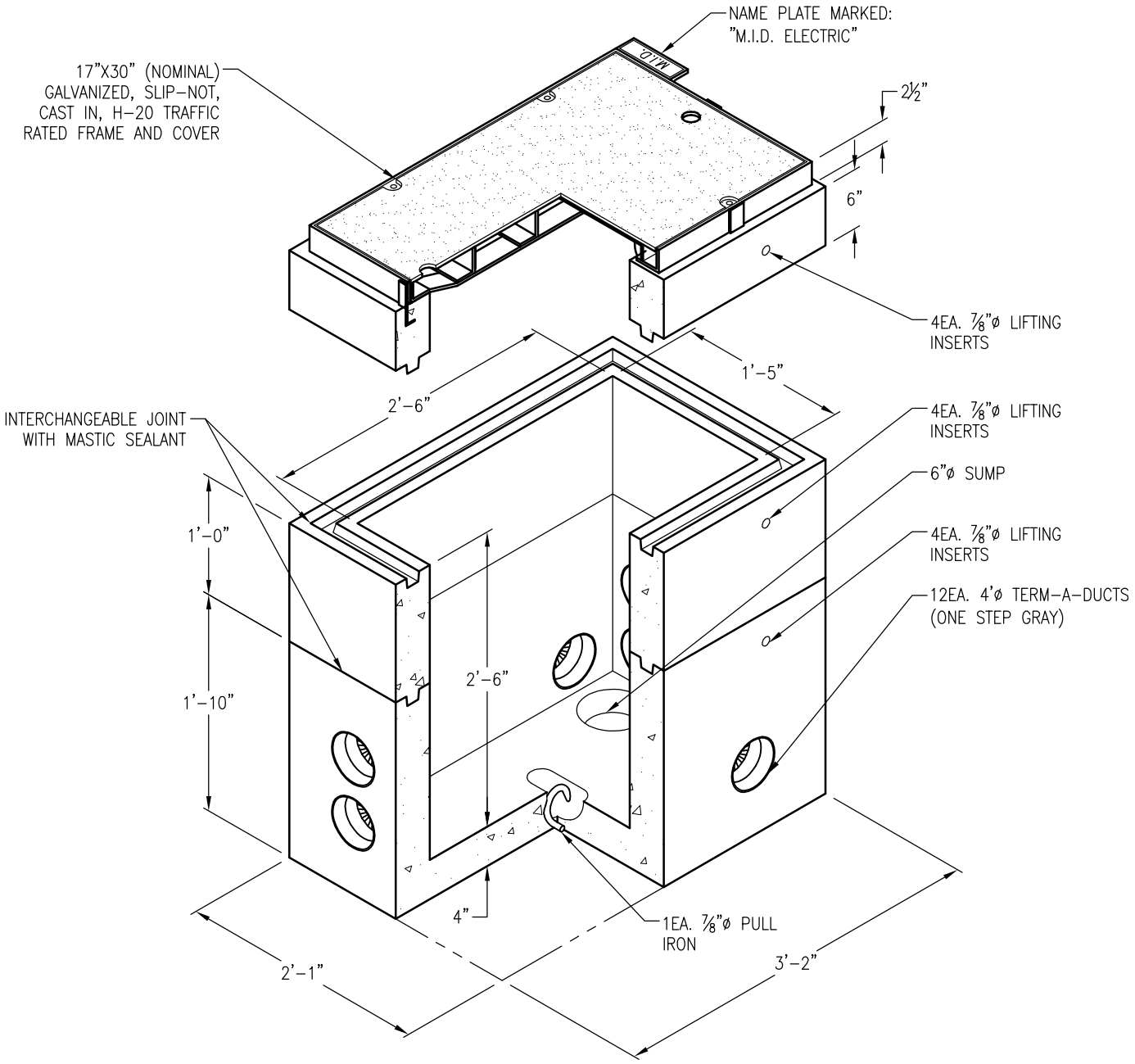

APPROXIMATE WEIGHTS:
6" RISER: 230 LBS
12" RISER: 460
BASE WEIGHT: 1,050 LBS

DRAWING MAY NOT CONFORM TO THE
MOST CURRENT SPECIFICATION

Oldcastle Precast®

Northern California
Madera ▪ Morgan Hill ▪ Pleasanton ▪ Santa Rosa ▪ Stockton ▪ Tulare
Phone: 925-750-6650 Fax: 925-750-6660

MID-1730

FILE NAME: MID-1.DWG

REVISED: MARCH 2016

www.oldcastleprecast.com

1'-5" X 2'-6" X 3'-0" (I.D.)
SPLICE BOX ASSEMBLY
M.I.D.

Copyright © 2016 Oldcastle® Precast, Inc.