4'-0" x 4'-0" x4'-0" I.D. Communication Vault VERIZON

Model: MH4X4X4

TOP
0.9 Tons

TERMADUCTS
(8) 4" Dia.

BOTTOM
3.7 Tons

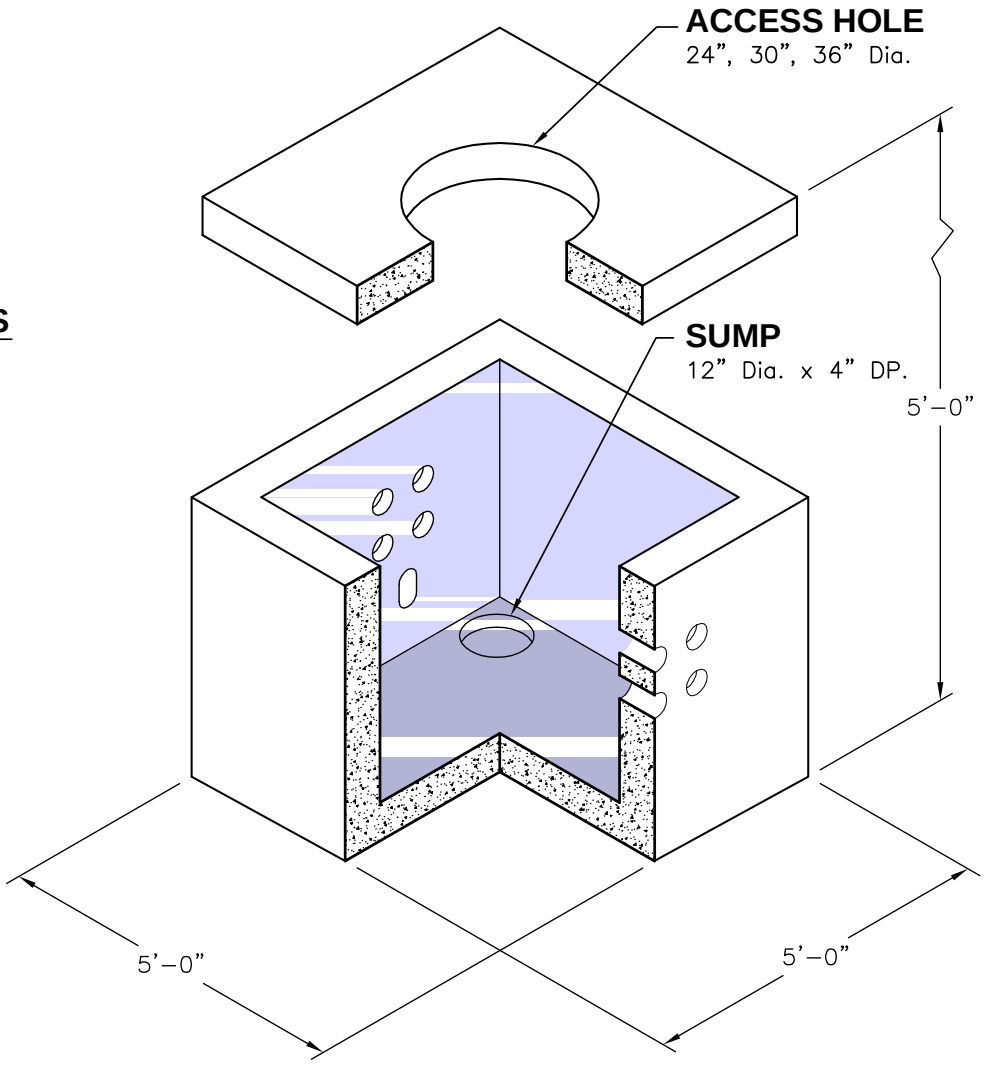

© 2013 Oldcastle Precast, Inc.