PF-V-6-0001

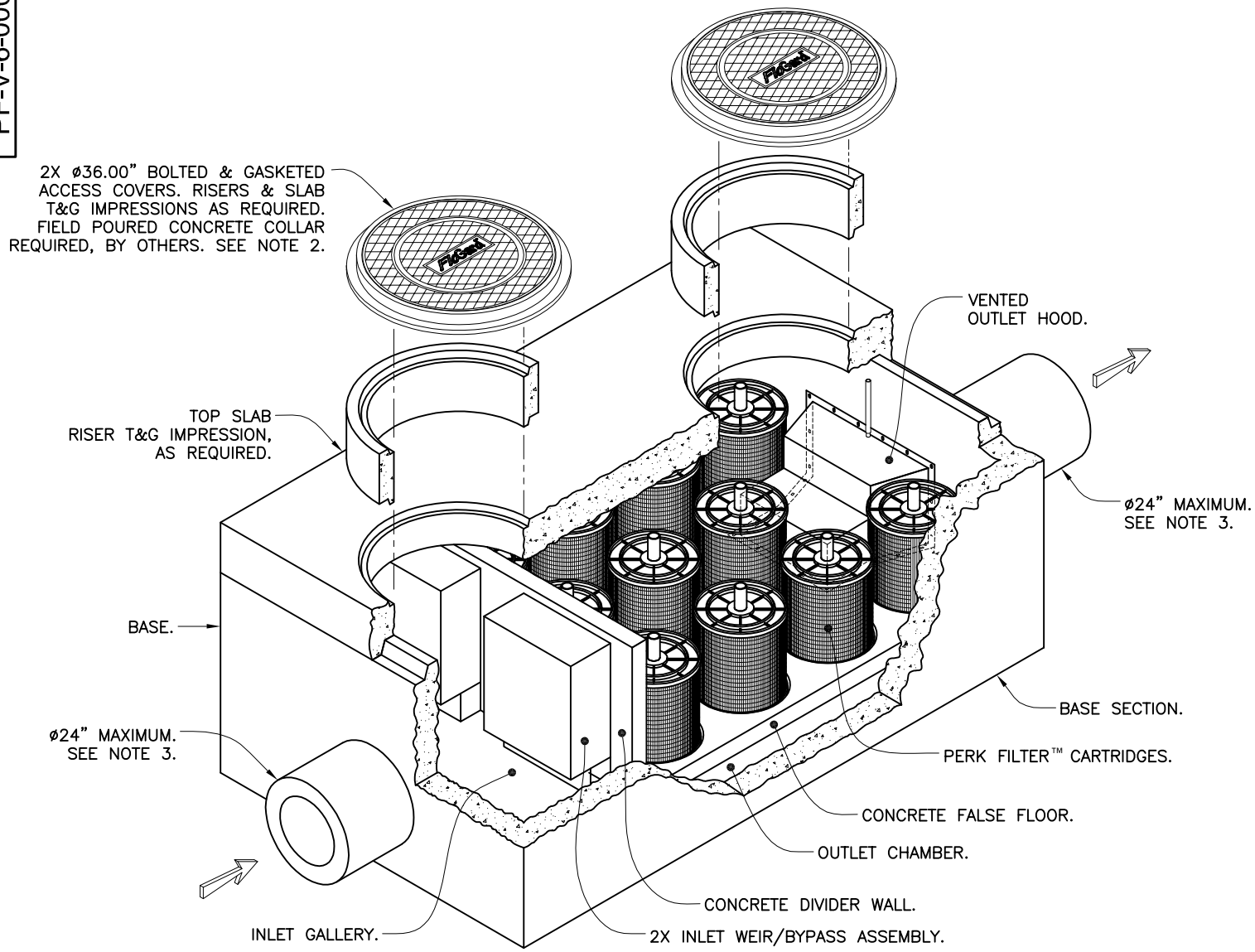


Notes:

1. Precast concrete structure shall be manufactured in accordance with ASTM Designation C857 and C858.

2. Filter system shall be supplied with traffic rated (H20) bolted & gasketed Ø36" circular access covers with risers as required. Shallow applications may require configurations with (H20) bolted & gasketed square/rectangular access hatches. Field poured concrete collars required, by others.

3. Inlet & outlet pipe(s) (Ø 24" maximum) may enter device on all three sides of the inlet & outlet chambers respectively.

4. Inlet chamber shall be supplied with a drain-down device designed to remove standing water between storm events.

5. For depths less than specified minimums contact Oldcastle® Stormwater Solutions for engineering assistance.

Media Filtration

# *Perk Filter*™

*6' Wide Concrete Vault*

*Four to Eleven Cartridges / Stacks*

**Oldcastle®**
Stormwater Solutions

7921 Southpark Plaza, Suite 200 | Littleton, CO | 80120 | Ph: 800.579.8819 | oldcastlestormwater.com

THIS DOCUMENT IS THE PROPERTY OF OLDCASTLE PRECAST, INC. IT IS SUBMITTED FOR REFERENCE PURPOSES ONLY AND SHALL NOT BE USED IN ANY WAY INJURIOUS TO THE INTERESTS OF SAID COMPANY. COPYRIGHT © 2010 OLDCASTLE PRECAST, INC. ALL RIGHTS RESERVED.

| DRAWING NO. | REV | ECO | DATE | |
|---|---|---|---|---|
| PF-V-6-0001 | F | ECO–0122 JPR 10/3/14 | JPR 7/8/08 | SHEET 1 OF 2 |

PF-V-6-0001

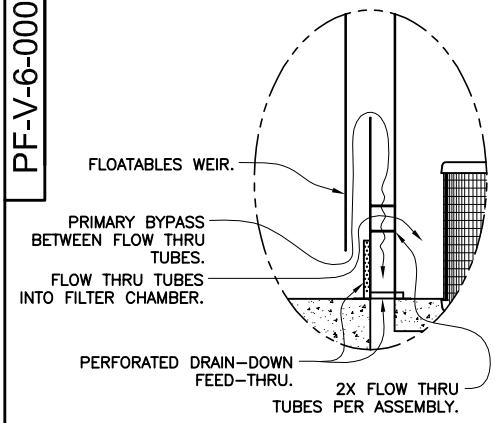


DETAIL A

INLET WEIR/BYPASS ASSEMBLY & DRAIN–DOWN.
SCALE: NONE

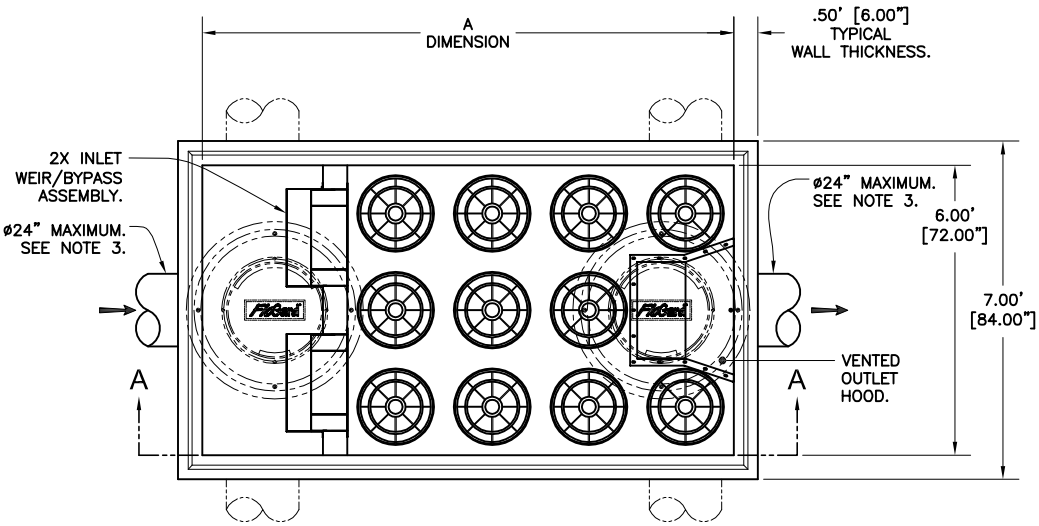


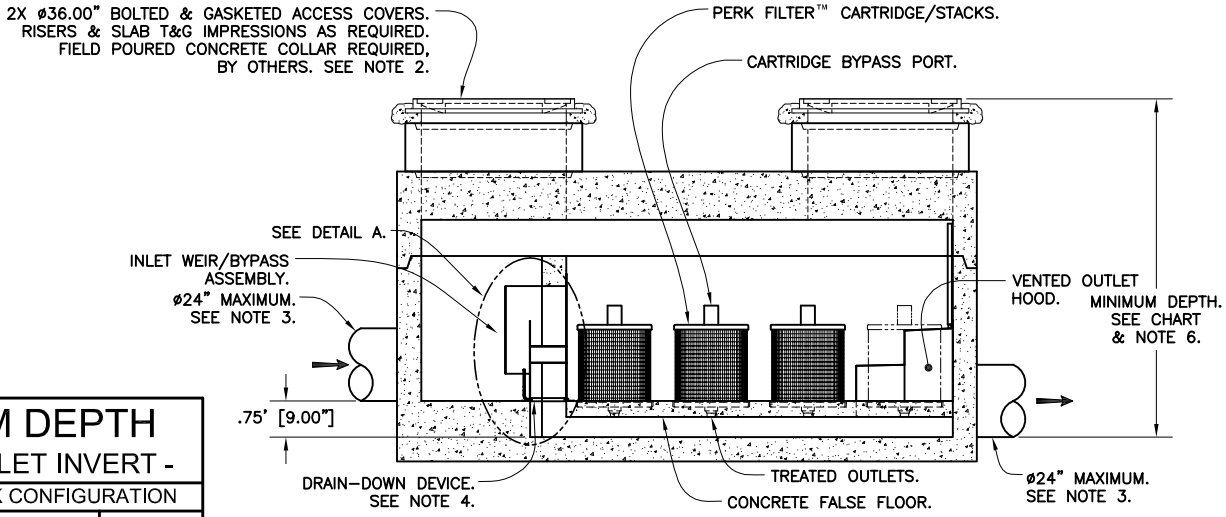


SECTION A-A

| MINIMUM DEPTH - RIM TO OUTLET INVERT - | | | |
|---|---|---|---|
| CARTRIDGE STACK CONFIGURATION | | | |
| 12" | 18" | 12" + 12" | 12" + 18" |
| 4.25' [51.00"] | 5.00' [60.00"] | 5.92' [71.00"] | 6.67' [80.00"] |

6' VAULT
TREATMENT FLOW RATES, TOTAL FLOW CAPACITIES & MAXIMUM HEAD LOSS

| CARTRIDGE STACK QUANTITY | A DIMENSION - LENGTH - (ID-FEET) | CARTRIDGE STACK CONFIGURATION | | | | | | | |
|---|---|---|---|---|---|---|---|---|---|
| | | 12" | | 18" | | 12" & 12" | | 12" & 18" | |
| | | TREATMENT FLOW RATE (GPM / CFS) | TOTAL FLOW CAPACITY (CFS) | TREATMENT FLOW RATE (GPM / CFS) | TOTAL FLOW CAPACITY (CFS) | TREATMENT FLOW RATE (GPM / CFS) | TOTAL FLOW CAPACITY (CFS) | TREATMENT FLOW RATE (GPM / CFS) | TOTAL FLOW CAPACITY (CFS) |
| 4 | 7 | 48 / 0.11 | 5.7 | 72 / 0.16 | 8.5 | 96 / 0.21 | 9.7 | 120 / 0.27 | 13.0 |
| 5 | 7 | 60 / 0.13 | 5.7 | 90 / 0.20 | 8.6 | 120 / 0.27 | 9.7 | 150 / 0.33 | 13.0 |
| 6 | 9 | 72 / 0.16 | 5.8 | 108 / 0.24 | 8.6 | 144 / 0.32 | 9.8 | 180 / 0.40 | 13.1 |
| 7 | 9 | 84 / 0.19 | 5.8 | 126 / 0.28 | 8.6 | 168 / 0.37 | 9.9 | 210 / 0.47 | 13.2 |
| 8 | 9 | 96 / 0.21 | 5.8 | 144 / 0.32 | 8.7 | 192 / 0.43 | 9.9 | 240 / 0.53 | 13.2 |
| 9 | 11 | 108 / 0.24 | 5.8 | 162 / 0.36 | 8.7 | 216 / 0.48 | 10.0 | 270 / 0.60 | 13.3 |
| 10 | 11 | 120 / 0.27 | 5.9 | 180 / 0.40 | 8.8 | 240 / 0.53 | 10.0 | 300 / 0.67 | 13.4 |
| 11 | 11 | 132 / 0.29 | 5.9 | 198 / 0.44 | 8.8 | 264 / 0.59 | 10.1 | 330 / 0.74 | 13.4 |
| | | | | | | | | | |
| MAXIMUM HEAD LOSS | | 1.7 FEET | | 2.3 FEET | | 2.9 FEET | | 3.5 FEET | |

Media Filtration

# *Perk Filter*™

*6' Wide Concrete Vault*

*Four to Eleven Cartridges / Stacks*

Oldcastle® Stormwater Solutions

7921 Southpark Plaza, Suite 200 | Littleton, CO | 80120 | Ph: 800.579.8819 | oldcastlestormwater.com

THIS DOCUMENT IS THE PROPERTY OF OLDCASTLE PRECAST, INC. IT IS SUBMITTED FOR REFERENCE PURPOSES ONLY AND SHALL NOT BE USED IN ANY WAY INJURIOUS TO THE INTERESTS OF SAID COMPANY. COPYRIGHT © 2010 OLDCASTLE PRECAST, INC. ALL RIGHTS RESERVED.

| DRAWING NO. | REV | ECO | DATE | |
|---|---|---|---|---|
| PF-V-6-0001 | F | ECO–0122 JPR 10/3/14 | JPR 7/8/08 | SHEET 2 OF 2 |