## GENERAL NOTES:

THE STORMCAPTURE SYSTEM BY OLDCASTLE STORMWATER SOLUTIONS IS PART OF THE STORMWATER MANAGEMENT SYSTEM FOR THE RESPECTIVE SITE, AS PREPARED BY THE PROJECT DESIGN ENGINEER. IT IS THE RESPONSIBILITY OF THE DESIGN ENGINEER TO DETERMINE DESIGN FLOW RATES, PRE-TREATMENT AND POST-TREATMENT REQUIREMENTS, STORAGE VOLUME, AND ENSURE THE FINAL DESIGN MEETS ALL CONVEYANCE AND STORAGE REQUIREMENTS. SYSTEM DESIGN AND TYPE, SOIL ANALYSIS, LOADING REQUIREMENTS, COVER HEIGHT AND MODULE SIZE DETERMINE THE FOUNDATION TYPE AND REQUIREMENTS AS STATED HEREIN. ANY VARIATIONS FOUND DURING CONSTRUCTION FROM THE SITE AND SYSTEM ANALYSIS MUST BE REPORTED TO THE PROJECT DESIGN ENGINEER. THE PROJECT DESIGN ENGINEER IS RESPONSIBLE FOR OBTAINING A GEOTECHNICAL ENGINEERING REPORT VERIFYING THE BEARING CAPACITY STATED IN DESIGN NOTES.

## DESIGN NOTES:

1. DESIGN LOADINGS:
   - A. AASHTO HS20-44 W/ IMPACT.
   - B. DEPTH OF COVER = 6" TO 5'-0".
   - C. ASSUMED WATER TABLE = BELOW BOTTOM.
   - D. EQUIVALENT FLUID PRESSURE = 45 PCF.
   - E. LATERAL LIVE LOAD SURCHARGE = 80 PSF.
   - F. NO LATERAL SURCHARGE FROM ADJACENT STRUCTURES.
2. CONCRETE 28 DAY COMPRESSIVE STRENGTH SHALL BE 6,000 PSI.
3. STEEL REINFORCEMENT: REBAR, ASTM A-615, GRADE 60.
4. CEMENT: ASTM C-150 SPECIFICATION.
5. STORMCAPTURE MODULE TYPE = DETENTION.
6. REQUIRED BASE LAYER DEPTH = 2" SAND BEDDING LAYER.
7. REQUIRED NATIVE ALLOWABLE SOIL BEARING PRESSURE = 2,500 PSF.
8. REFERENCE STANDARDS:
   - A. ASTM C 890
   - B. ASTM C 891
   - C. ASTM C 913
9. LESS THAN 6" OR GREATER THAN 5'-0" OF COVER REQUIRES CUSTOM STRUCTURAL DESIGN AND MAY REQUIRE THICKER SUBGRADE.

## INSTALLATION NOTES:

STORMCAPTURE MODULES ARE TO BE INSTALLED IN ACCORDANCE WITH ASTM C891, INSTALLATION OF UNDERGROUND PRECAST UTILITY STRUCTURES. PROJECT PLAN AND SPECIFICATIONS MUST BE FOLLOWED ALONG WITH ANY APPLICABLE REGULATIONS.

1. PLAN LINE, GRADE AND ELEVATIONS MUST BE FOLLOWED.
2. WHERE SPECIFIED, AN 8 OZ. NON-WOVEN GEOTEXTILE FABRIC MUST BE USED AS A SEPARATION LAYER AROUND THE STORMCAPTURE SYSTEM.
3. PENETRATIONS IN THE GEOTEXTILE MAY ONLY BE MADE WITH SMOOTH WALL PIPES. MAKE PENETRATIONS FOR ALL OUTLETS BEFORE MAKING PENETRATIONS FOR ANY INLETS.
4. SUBGRADE MATERIALS, IF SPECIFIED, SHALL BE CLEAN, DURABLE CRUSHED AGGREGATE COMPACTED AS DIRECTED BY THE ENGINEER. OLDCASTLE RECOMMENDS SIZE 5, 56, OR 57 (PER ASTM C33).
5. DESIGNATED EMBEDDED LIFTERS MUST BE USED. USE PROPER RIGGING TO ASSURE ALL LIFTERS ARE EQUALLY ENGAGED WITH A MINIMUM 60 DEGREE ANGLE ON SLINGS AS NOTED AND IN ACCORDANCE WITH OLDCASTLE LIFTING PROCEDURES.
6. MODULES MUST BE PLACED AS CLOSE TOGETHER AS POSSIBLE, AND GAPS SHALL NOT BE GREATER THAN 3/4". ALL EXTERIOR SYSTEM JOINTS SHALL BE COVERED WITH A MIN. 8" JOINT WRAP ON SIDES AND TOP (CS-212 CONSEAL OR EQUIVALENT). IN A CLAMSHELL DESIGN INSTALL ONE ROW CS-102 CONSEAL (OR EQUIVALENT) BETWEEN PRECAST PIECES.
7. AUTHORIZATION SHALL BE GIVEN BY THE PROJECT ENGINEER OR DESIGNATED PERSON PRIOR TO PLACEMENT ON BACKFILL FOR THE SYSTEM. CARE MUST BE TAKEN DURING PLACEMENT OF BACKFILL NOT TO DISPLACE MODULES OR JOINT WRAP. BACKFILL SHALL BE COMPACTED TO 95% STANDARD PROCTOR DENSITY OR AS SPECIFIED, AND SHALL NOT BE COMPACTED WITHIN 6" OF MODULE.
8. CONSTRUCTION EQUIPMENT EXCEEDING DESIGN LOADING SHALL NOT BE ALLOWED ON STRUCTURE.
9. TERMADUCTS TO BE KNOCKED OUT AT SPECIFIED LOCATIONS IN FIELD BY OTHERS. SEE SITE LAYOUT FOR LOCATIONS.

## INLETS AND RISERS:

ALL PIPE INLETS SHALL EXTEND INSIDE MODULE A MINIMUM OF 4". PLACE A NON-SHRINK, NON-METALIC GROUT, MIN. 3,000 PSI IN ANNULAR SPACE TO ELIMINATE ALL VOIDS.

### REVISIONS

| REVISION | DATE | SHEETS | DESCRIPTION OF REVISION |
|---|---|---|---|
| | | | |
| | | | |
| | | | |
| | | | |

STORMCAPTURE®

### TABLE OF CONTENTS


| | |
|---|---|
| NOTES & GENERAL ISO | 1 |
| TYPICAL ELEVATION | 2 |
| EXTERIOR DETAILS | 3 |
| INTERIOR DETAILS | 4 |


NOTE: THIS VIEW IS FOR ILLUSTRATION PURPOSES ONLY TO SHOW FEATURES OF THE SYSTEM. ACTUAL LAYOUT VARIES BY PROJECT, SEE SITE PLAN LAYOUT. ALL PERIMETER WALLS ARE SOLID.

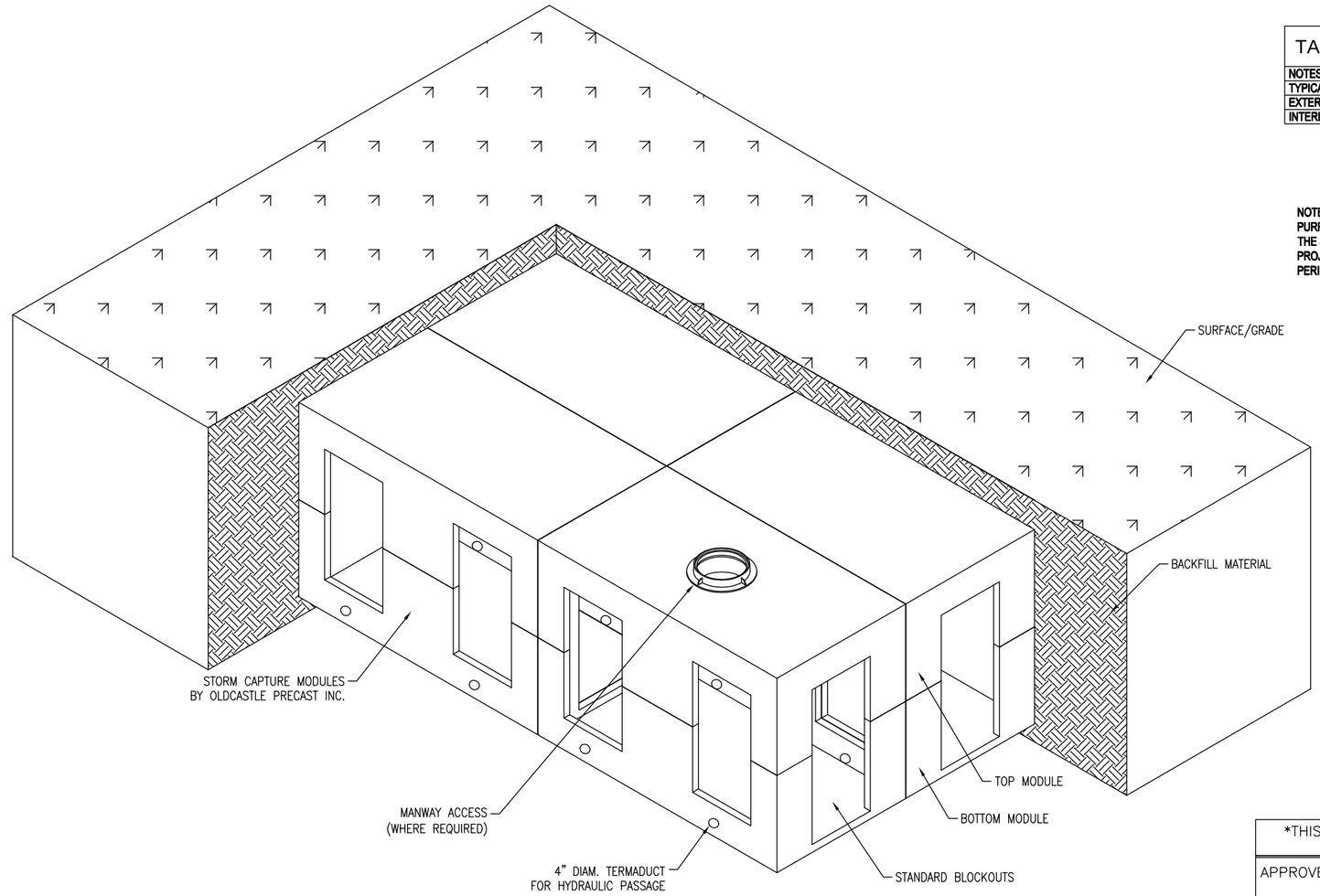


**TYPICAL ISO VIEW**
N.T.S.

*THIS MUST BE FILLED OUT BEFORE MANUFACTURING BEGINS*

APPROVED W/ NO EXCEPTIONS TAKEN: ☐
APPROVED AS NOTED: ☐
REVISE AND RESUBMIT: ☐

**- PRELIMINARY -**
**NOT FOR CONSTRUCTION**

SIGNATURE DATE


Oldcastle® Stormwater Solutions
7921 SOUTHPARK PLAZA, SUITE 200, LITTLETON, CO 80120
PHONE: 1-888-965-3227 FAX: 303-794-7497



THIS DOCUMENT IS THE PROPERTY OF OLDCASTLE PRECAST, INC. IT IS CONFIDENTIAL, SUBMITTED FOR REFERENCE PURPOSES ONLY, AND SHALL NOT BE USED IN ANY WAY INJURIOUS TO THE INTERESTS OF, OR WITHOUT THE WRITTEN PERMISSION OF OLDCASTLE PRECAST, INC. COPYRIGHT ©2016 OLDCASTLE PRECAST, INC ALL RIGHTS RESERVED


STORMCAPTURE
GENERAL ISO

CUSTOMER

| DATE | SALES | DRAWN | ENGINEER | CHECKED | SALES ORDER |
|---|---|---|---|---|---|
| | STS | STS | JH | | |

| DRAWING NUMBER | REVISION | SHEET |
|---|---|---|
| SC2 - 9 ft clamshell | REV DATE | 1 OF 4 |

STORMCAPTURE®

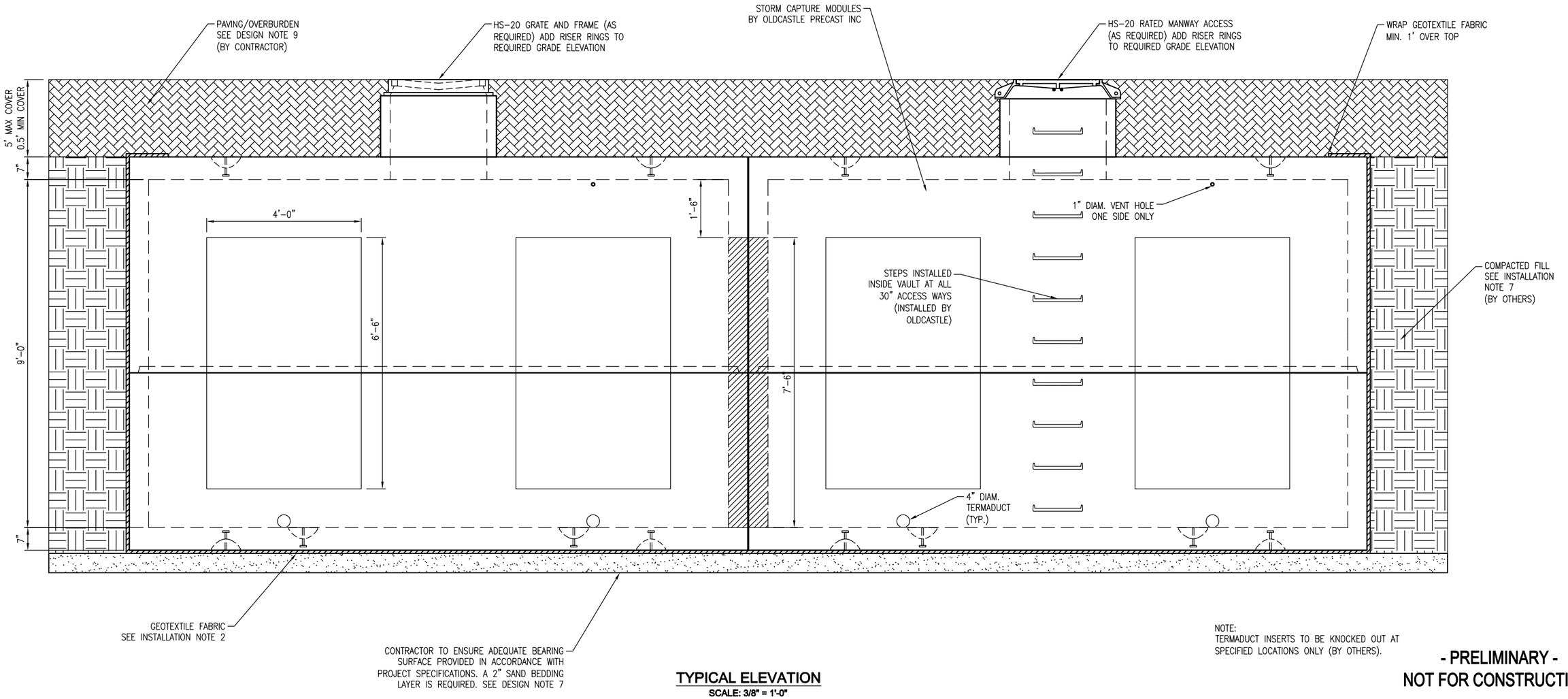


NOTE:
TERMADUCT INSERTS TO BE KNOCKED OUT AT SPECIFIED LOCATIONS ONLY (BY OTHERS).

## TYPICAL ELEVATION

SCALE: 3/8" = 1'-0"

**- PRELIMINARY -**
**NOT FOR CONSTRUCTION**


Oldcastle® Stormwater Solutions
7921 SOUTHPARK PLAZA, SUITE 200, LITTLETON, CO 80120
PHONE: 1-888-965-3227 FAX: 303-794-7497



THIS DOCUMENT IS THE PROPERTY OF OLDCASTLE PRECAST, INC. IT IS CONFIDENTIAL, SUBMITTED FOR REFERENCE PURPOSES ONLY, AND SHALL NOT BE USED IN ANY WAY INJURIOUS TO THE INTERESTS OF, OR WITHOUT THE WRITTEN PERMISSION OF OLDCASTLE PRECAST, INC. COPYRIGHT ©2016 OLDCASTLE PRECAST, INC ALL RIGHTS RESERVED


STORMCAPTURE
TYPICAL ELEVATION

CUSTOMER

| DATE | SALES | DRAWN | ENGINEER | CHECKED | SALES ORDER |
|---|---|---|---|---|---|
| | STS | STS | JH | | |
| DRAWING NUMBER | | | | REVISION | SHEET |
| SC2 - 9 ft clamshell | | | | REV DATE | 2 OF 4 |

STORMCAPTURE

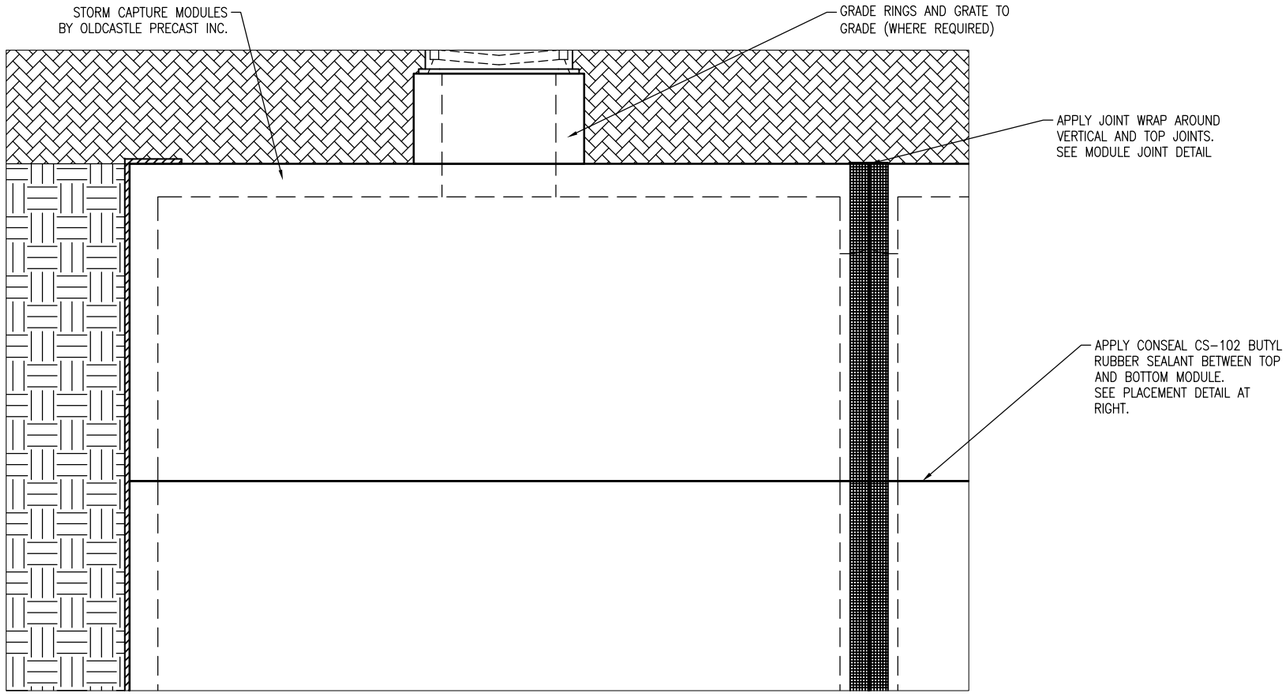


## GRATED INLET DETAIL

SCALE: 3/8" = 1'-0"

KEYWAYS MUST BE FREE OF DIRT, ROCKS, AND WATER. ROCKS AND DIRT PREVENT THE VAULT SECTIONS FROM SEATING AND SEALING PROPERLY. REMOVE ALL PROTECTIVE PAPER FROM RUBBER SEALANT MATERIAL. SPLICE RUBBER SEALANT MATERIAL WITH A "SIDE BY SIDE" JOINT, AWAY FROM CORNERS. CORNER SPLICING WILL NOT SEAL PROPERLY.

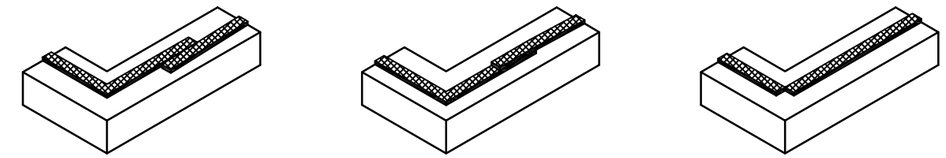

CORRECT – INSTALL RUBBER SEALANT MATERIAL AT THE OUTER EDGE OF THE KEYWAY. RUBBER SEALANT SHOULD BE CONTINUOUS AROUND CORNERS.

INCORRECT – DO NOT OVERLAP THE RUBBER SEALANT MATERIAL AT SPLICE.

INCORRECT – DO NOT SPLICE RUBBER SEALANT MATERIAL AT A CORNER. RUBBER SEALANT SHOULD BE CONTINUOUS AROUND CORNERS.

## CONSEAL CS-102 BUTYL RUBBER SEALANT PLACEMENT DETAIL

NTS

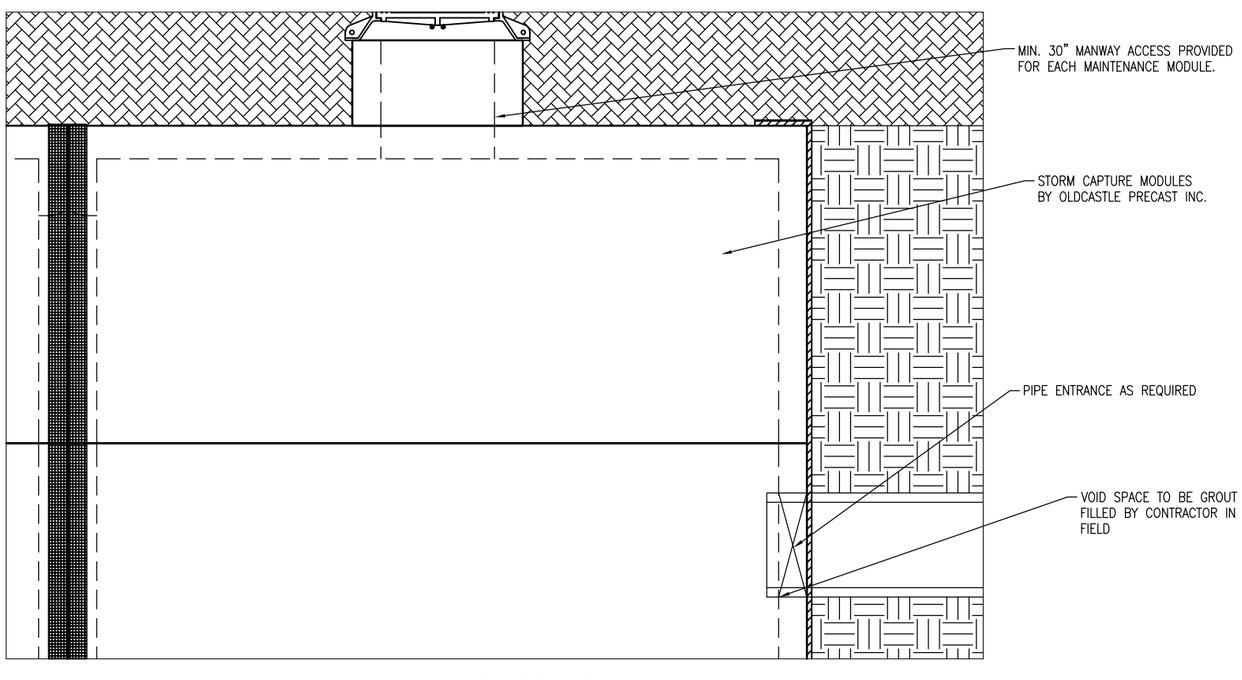


## MANWAY ACCESS DETAIL

SCALE: 3/8" = 1'-0"

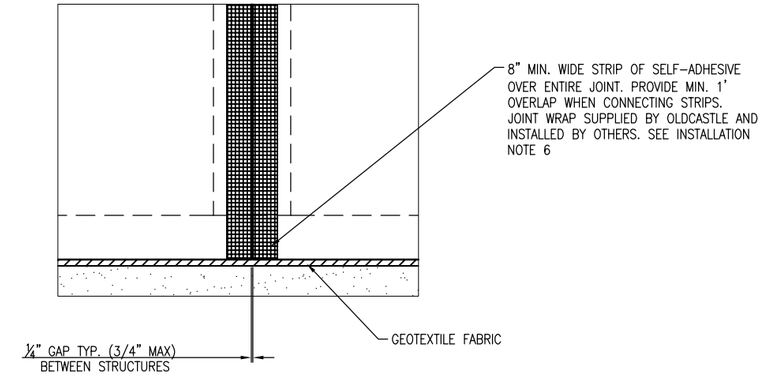


## MODULE JOINT DETAIL

SCALE: 1/2" = 1'-0"

**- PRELIMINARY -**
**NOT FOR CONSTRUCTION**

Oldcastle® Stormwater Solutions
7921 SOUTHPARK PLAZA, SUITE 200, LITTLETON, CO 80120
PHONE: 1-888-865-3227 FAX: 303-794-7497

THIS DOCUMENT IS THE PROPERTY OF OLDCASTLE PRECAST, INC. IT IS CONFIDENTIAL, SUBMITTED FOR REFERENCE PURPOSES ONLY, AND SHALL NOT BE USED IN ANY WAY INJURIOUS TO THE INTERESTS OF, OR WITHOUT THE WRITTEN PERMISSION OF OLDCASTLE PRECAST, INC. COPYRIGHT ©2016 OLDCASTLE PRECAST, INC ALL RIGHTS RESERVED

STORMCAPTURE
EXTERIOR DETAILS

CUSTOMER

| DATE | SALES | DRAWN | ENGINEER | CHECKED | SALES ORDER |
|---|---|---|---|---|---|
| | STS | STS | JH | | |

| DRAWING NUMBER | REVISION | SHEET |
|---|---|---|
| SC2 - 9 ft clamshell | REV DATE | 3 OF 4 |

STORMCAPTURE

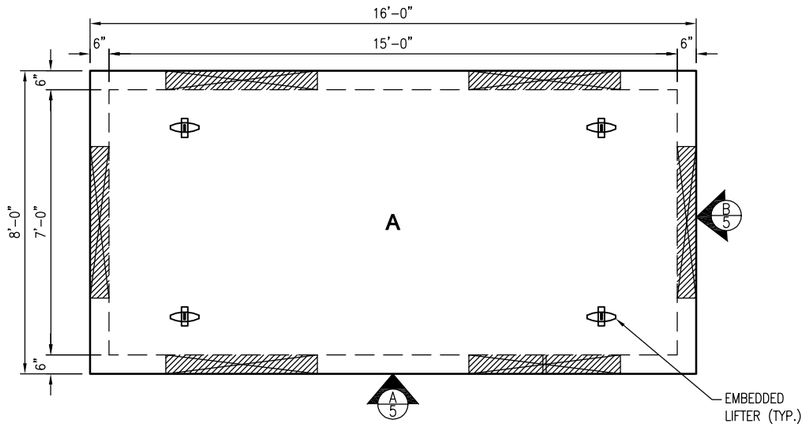


## STORM CAPTURE PLAN VIEW

SCALE: 1/4" = 1'-0"

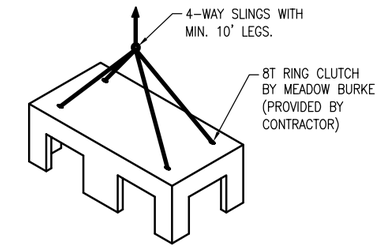


## TOP MODULE LIFTING DETAIL

N.T.S.

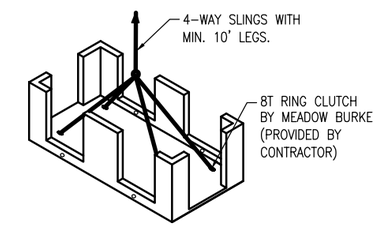


## BOTTOM MODULE LIFTING DETAIL

N.T.S.

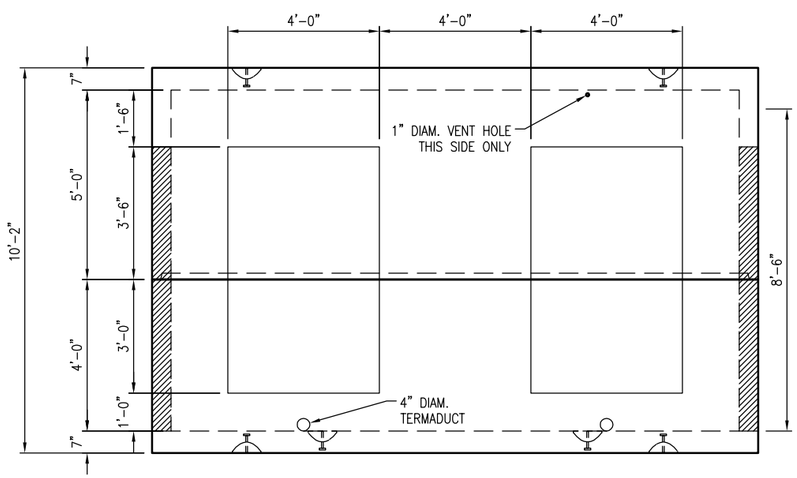


## VIEW A

SCALE: 1/4" = 1'-0"

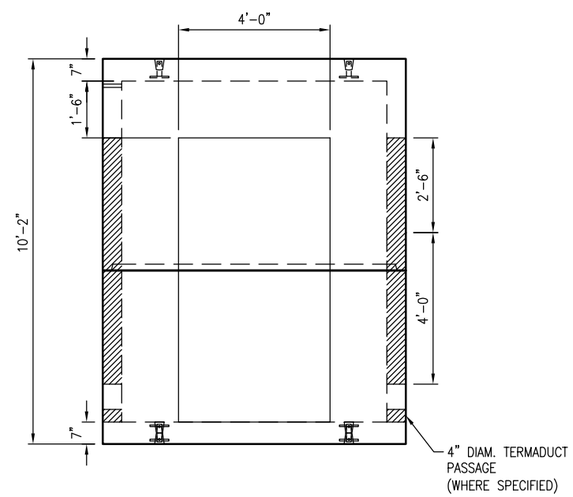


## VIEW B

SCALE: 1/4" = 1'-0"

- PRELIMINARY -
NOT FOR CONSTRUCTION


Oldcastle® Stormwater Solutions
7921 SOUTHPARK PLAZA, SUITE 200, LITTLETON, CO 80120
PHONE: 1-888-965-3227 FAX: 303-794-7497



THIS DOCUMENT IS THE PROPERTY OF OLDCASTLE PRECAST, INC. IT IS CONFIDENTIAL, SUBMITTED FOR REFERENCE PURPOSES ONLY, AND SHALL NOT BE USED IN ANY WAY INJURIOUS TO THE INTERESTS OF, OR WITHOUT THE WRITTEN PERMISSION OF OLDCASTLE PRECAST, INC. COPYRIGHT ©2016 OLDCASTLE PRECAST, INC ALL RIGHTS RESERVED


STORMCAPTURE
INTERIOR DETAILS

CUSTOMER

| DATE | SALES | DRAWN | ENGINEER | CHECKED | SALES ORDER |
|---|---|---|---|---|---|
| | STS | STS | JH | | |

| DRAWING NUMBER | REVISION | SHEET |
|---|---|---|
| SC2 - 9 ft clamshell | REV DATE | 4 OF 4 |