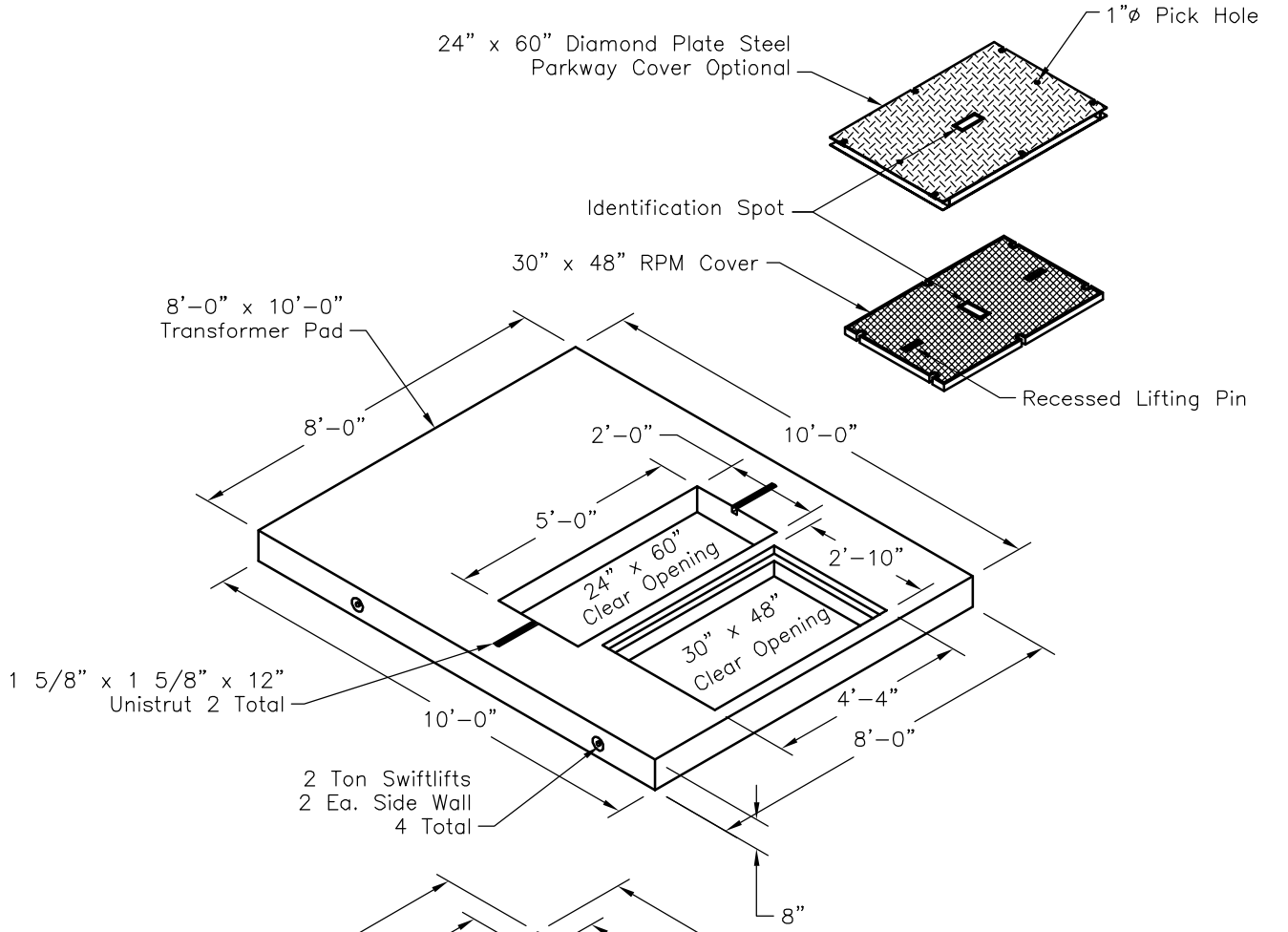

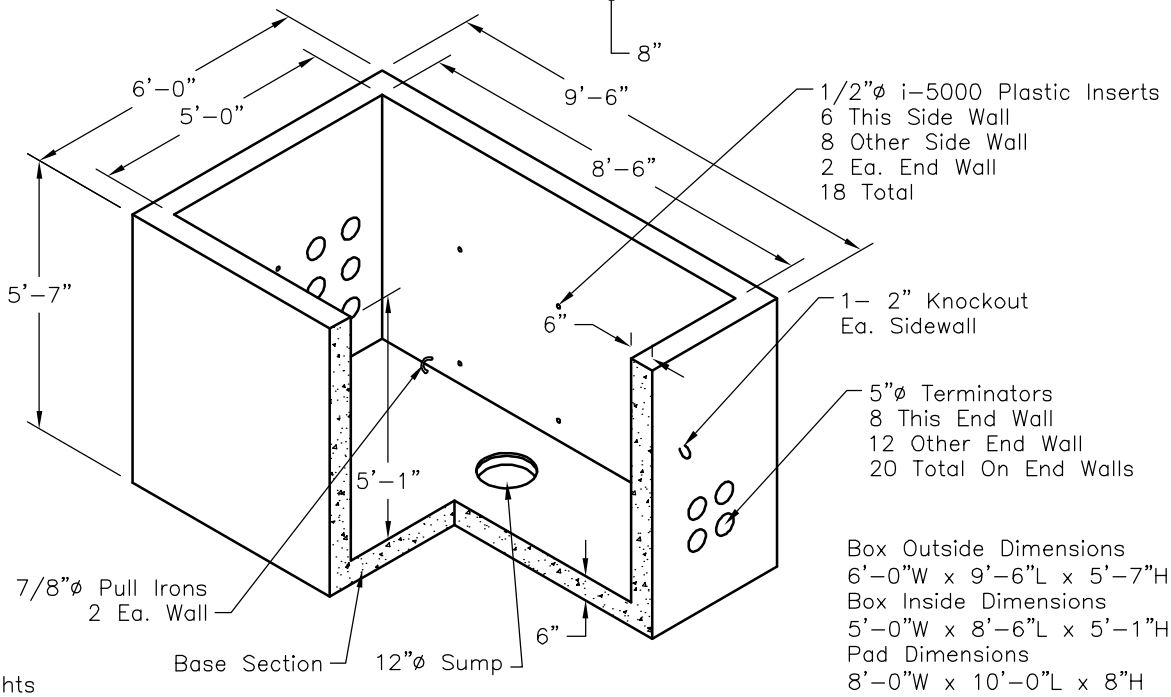

Approximate Weights
Box – 16200 Lbs
Pad – 6000 Lbs

SCALE:1/4" = 1'-0"

Box Outside Dimensions
6'-0"W x 9'-6"L x 5'-7"H
Box Inside Dimensions
5'-0"W x 8'-6"L x 5'-1"H
Pad Dimensions
8'-0"W x 10'-0"L x 8"H
Minimum Excavation Is To Be 12" Larger Than Product On All Sides

Oldcastle Precast®
UV UTILITY VAULT™ Division
Southern California
Fontana, San Diego, Santa Paula
Phone: 800-626-3860 Fax: 909-428-3737

Riverside SB-4

FILE NAME: 070UEE810SBXRS.DWG

ISSUE DATE: October 2006

www.oldcastleprecast.com

8'-0" x 10'-0" x 8" Pad
5'-0" x 8'-6" x 5'-1" Box
City of Riverside

Copyright © 2008 Oldcastle® Precast, Inc.