SD-3

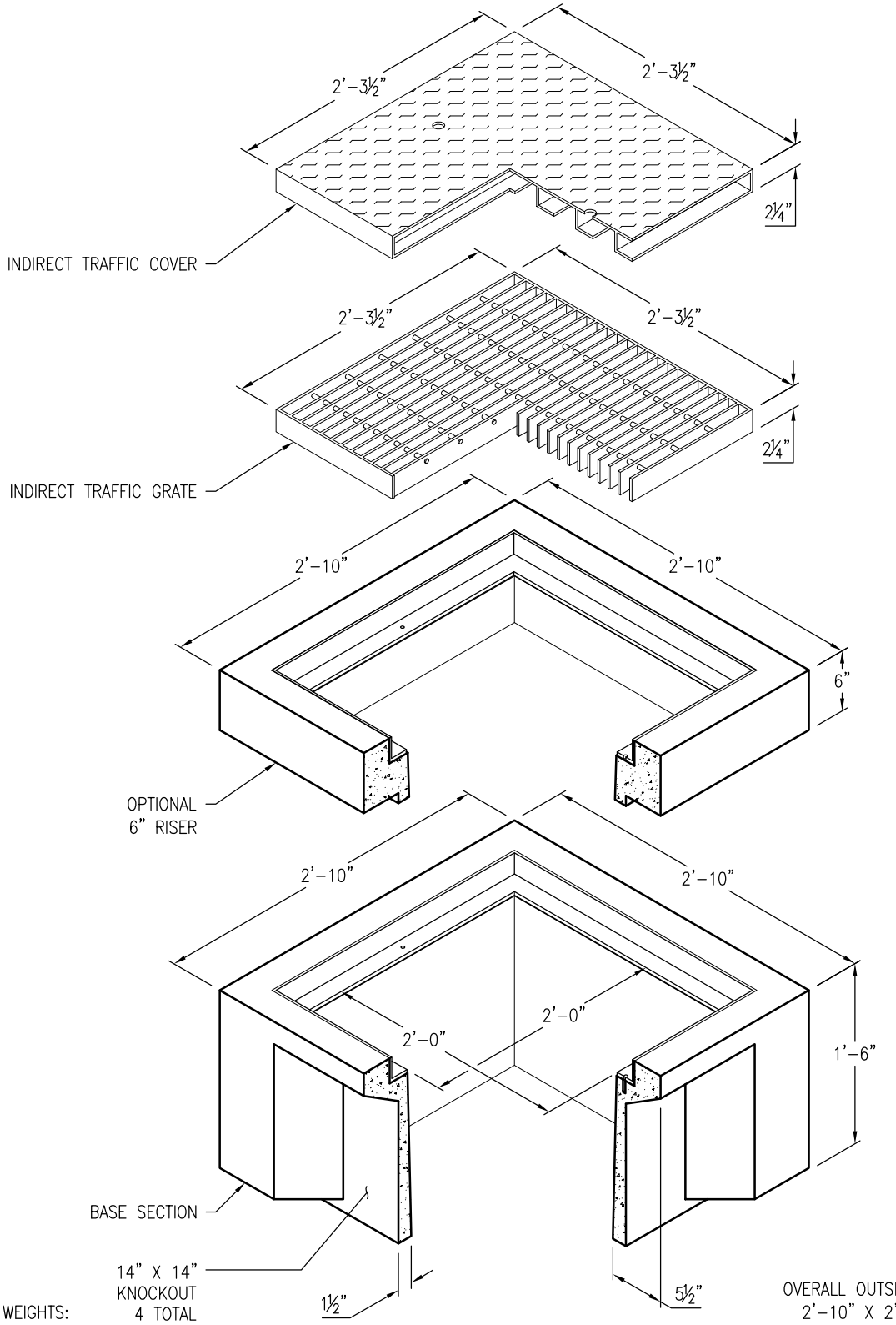

APPROXIMATE WEIGHTS:
6" RISER – 300 LBS
BASE – 700 LBS

OVERALL OUTSIDE DIMENSIONS
2'-10" X 2'-10" X VARIES
OVERALL INSIDE DIMENSIONS
2'-0" X 2'-0" X VARIES

Oldcastle Precast®

Southern California
Fontana ■ Lakeside ■ Perris ■ San Diego ■ Santa Paula
Phone: 800-626-3860 Fax: 877-797-0750

2424CB

FILE NAME: 0702424SDCB.DWG

REVISED: Nov-17

www.oldcastleprecast.com

24" X 24"
CATCH BASIN
STORM DRAIN

Copyright © 2017 Oldcastle Precast, Inc.®