GRADE RINGS AVAILABLE TO MEET REQUIRED DEPTH

STD–23

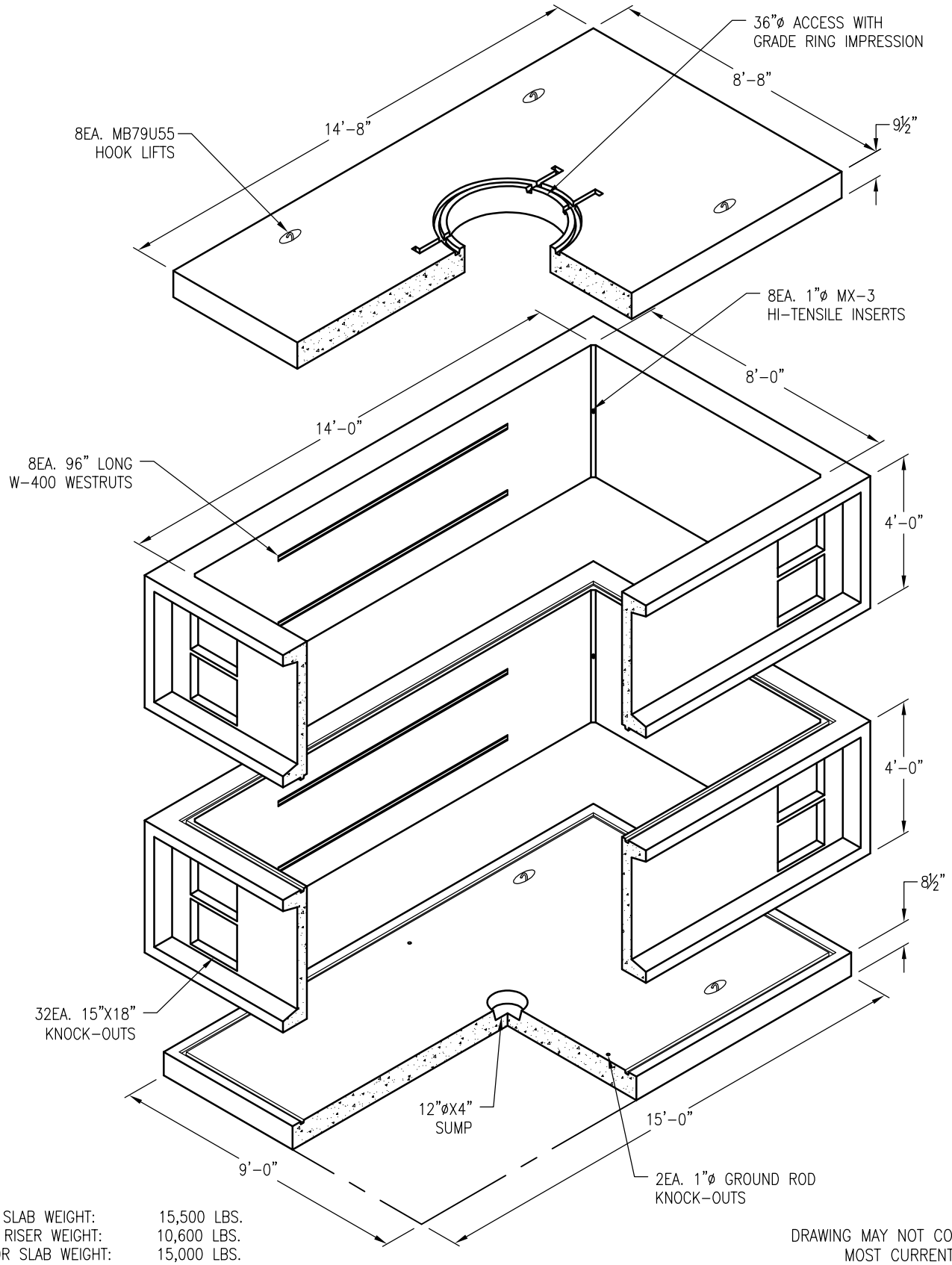

TOP SLAB WEIGHT:	15,500 LBS.
1EA. RISER WEIGHT:	10,600 LBS.
FLOOR SLAB WEIGHT:	15,000 LBS.

DRAWING MAY NOT CONFORM TO THE MOST CURRENT SPECIFICATION

Oldcastle Precast®

Northern California
Madera ▪ Morgan Hill ▪ Pleasanton ▪ Santa Rosa ▪ Stockton ▪ Tulare
Phone: 925-750-6650 Fax: 925-750-6660

STD-814

FILE NAME: STD–23.DWG

REVISED: MARCH 2016

www.oldcastleprecast.com

8'-0" X 14'-0" X 8'-0" (I.D.) UTILITY VAULT STANDARD LAYOUT

Copyright © 2016 Oldcastle® Precast, Inc.