## 16 1/2"Ø C.I. Cover

Weight – 55 Lbs.
Item# – 7102600

## Curb Top W/ Frame

Weight – 5175 Lbs.
Item# – 1206680

| Extension | | |
|---|---|---|
| "A" | Weight | Item# |
| 6" | 1200 Lbs. | 1206690 |
| 12" | 2400 Lbs. | 1206700 |
| 18" | 3600 Lbs. | 1206840 |
| 24" | 4775 Lbs. | 1206720 |
| 30" | 5975 Lbs. | 1206740 |
| 36" | 7175 Lbs. | 1206760 |
| 42" | 8375 Lbs. | 1206820 |

## Extension

Weight – See Table
Item# – See Table

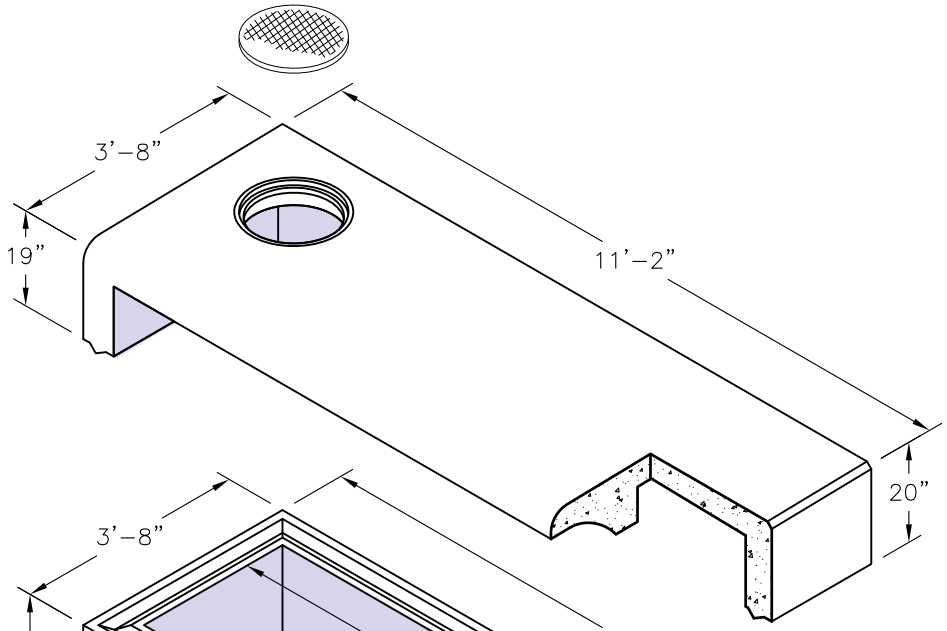


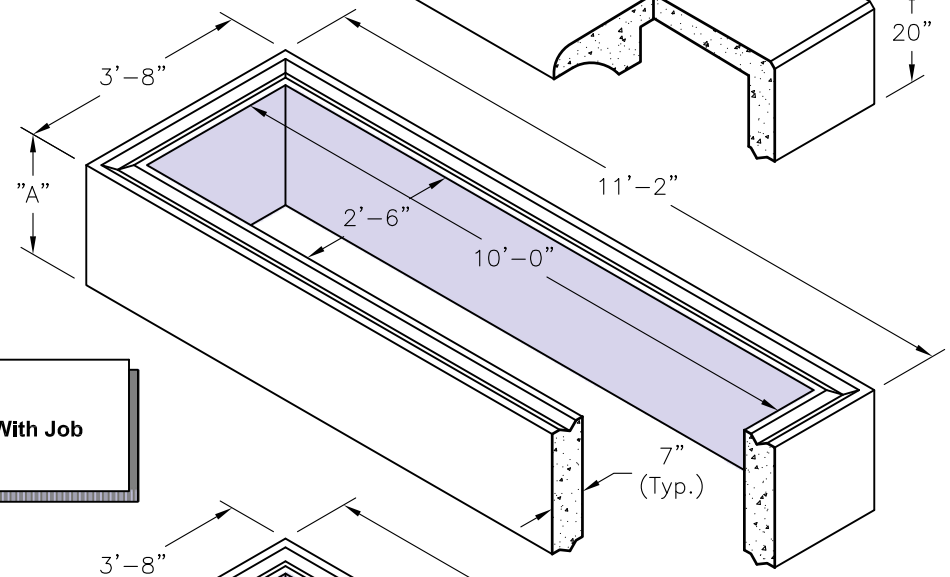


**GENERAL NOTES:**

1. **Bedding Shall be in Accordance With Job and Plan Specifications.**

## Bottom

Weight – 10,500 Lbs.
Item# – 1206780

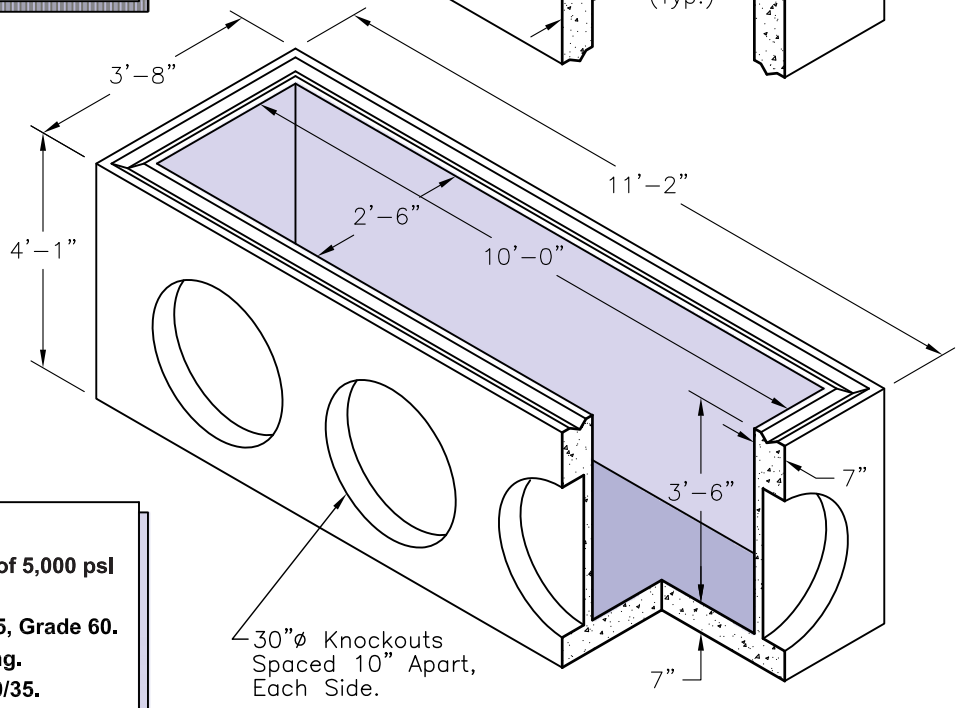


**SPECIFICATIONS:**

1. **Concrete: Has a Design Strength of 5,000 psi at 28 Days.**
2. **Steel Reinforcement: ASTM A-615, Grade 60.**
3. **Loading: Designed for H20 Loading.**
4. **C.I. Castings: ASTMA-48, Class 30/35.**


© 2013 Oldcastle Precast, Inc.