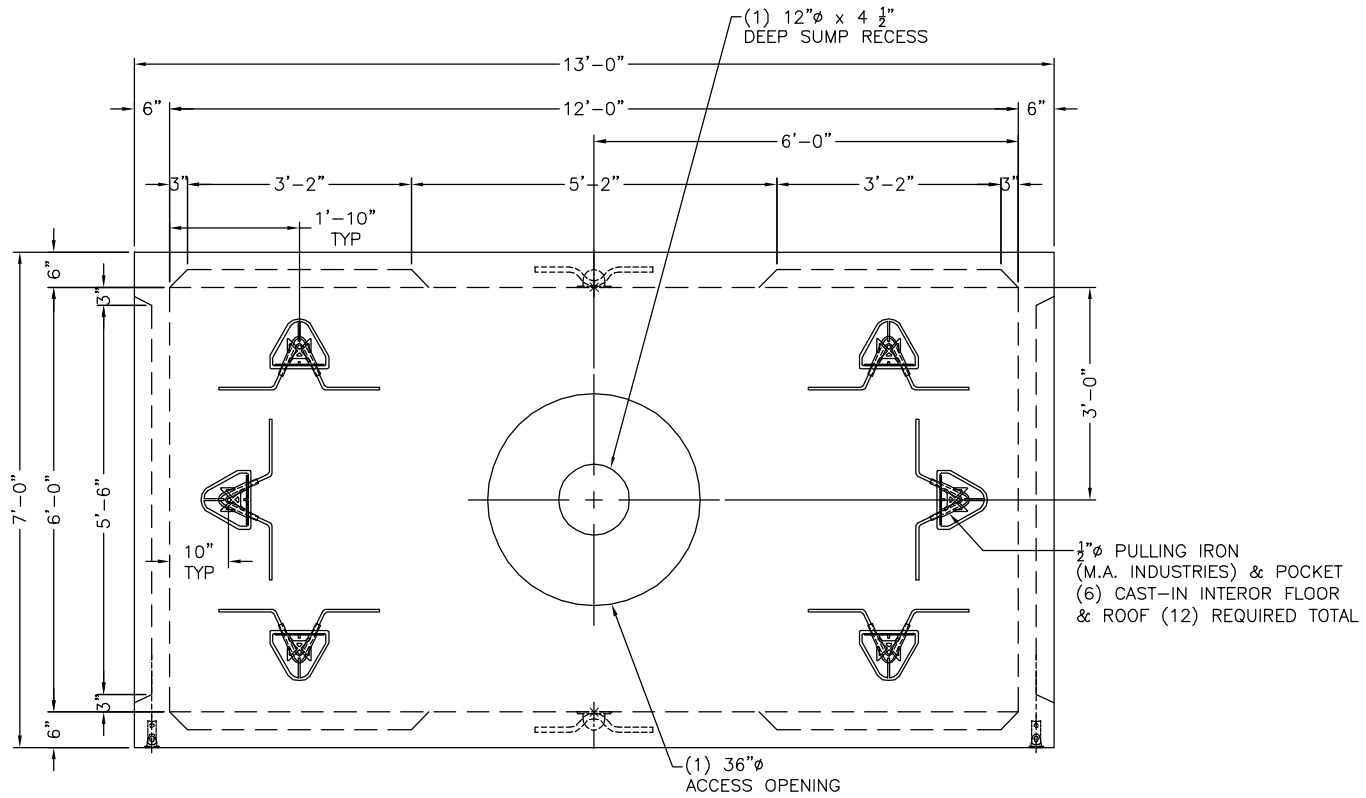

PLAN VIEW

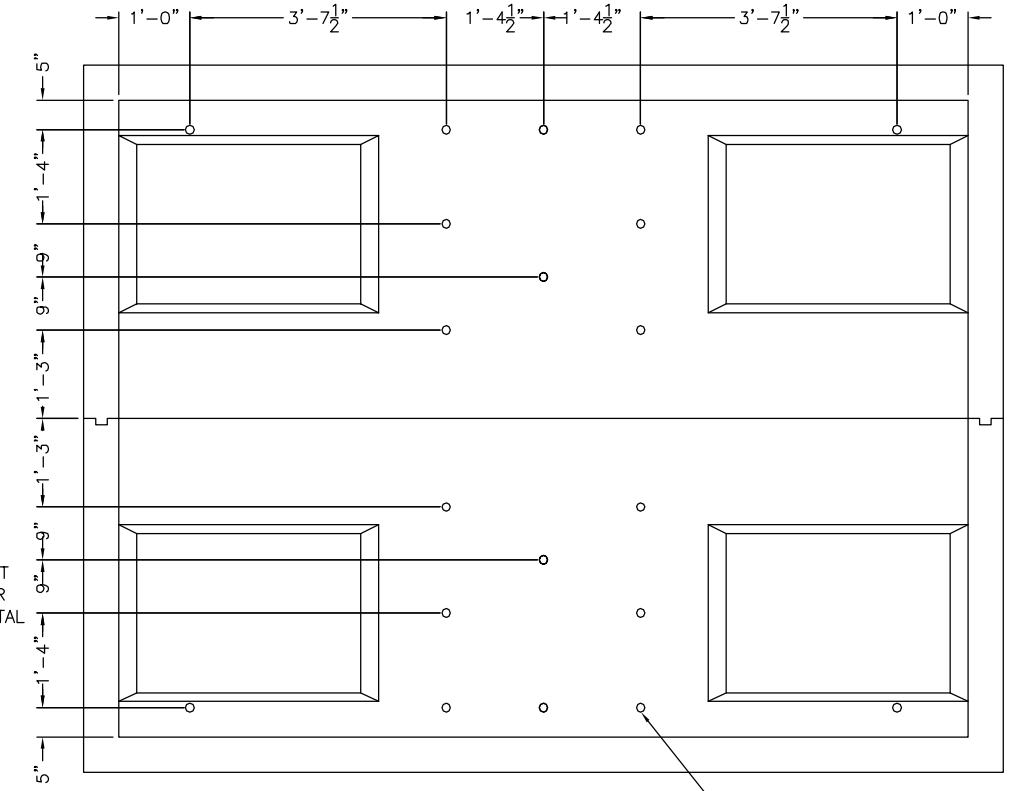

INSERT PATTERN (LONG WALL)

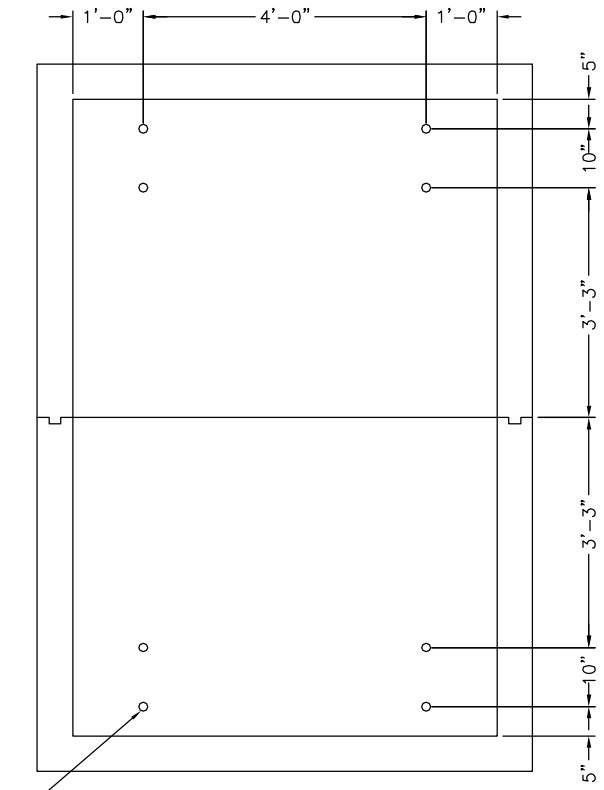

INSERT PATTERN (SHORT WALL)

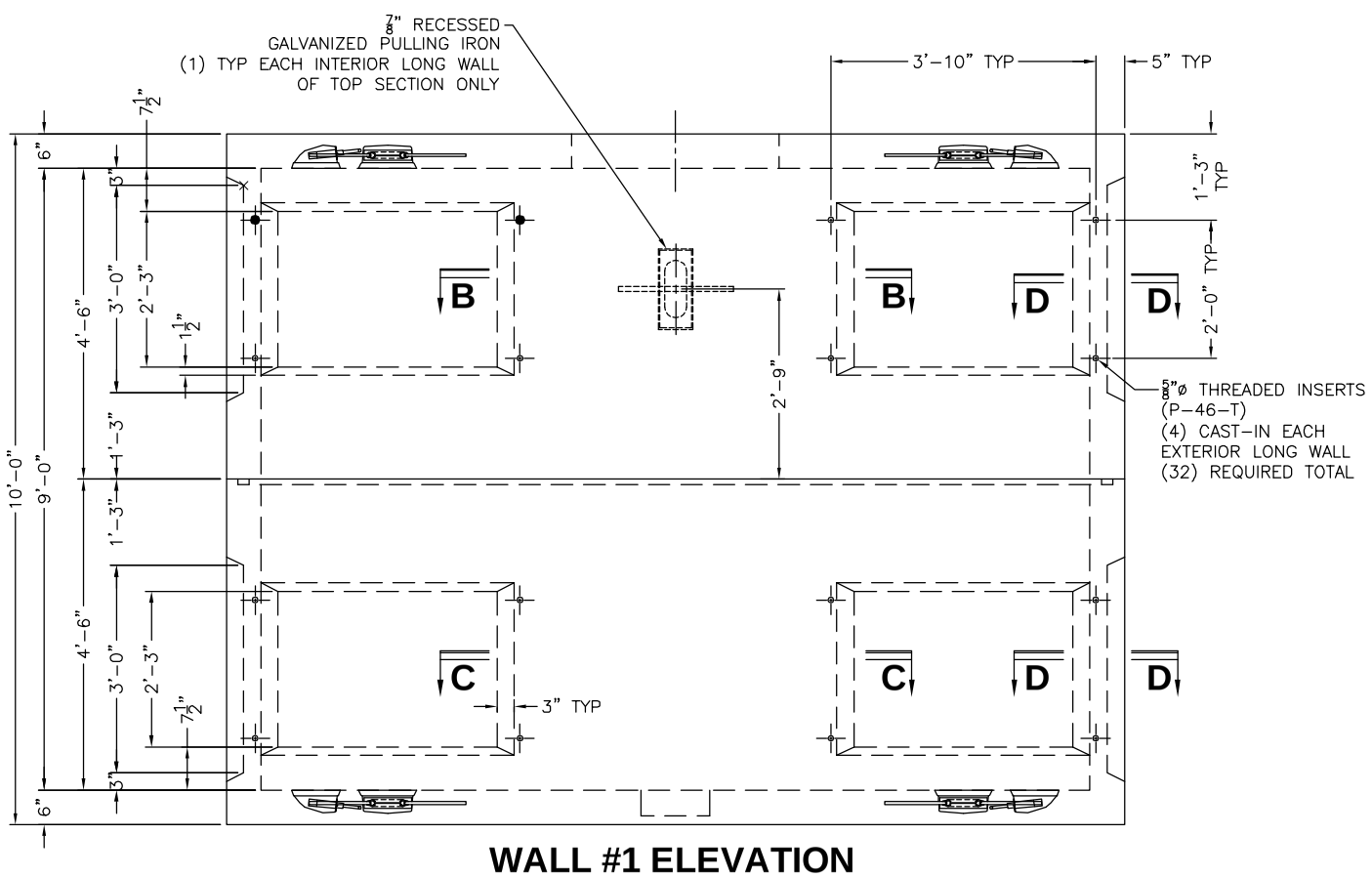

WALL #1 ELEVATION

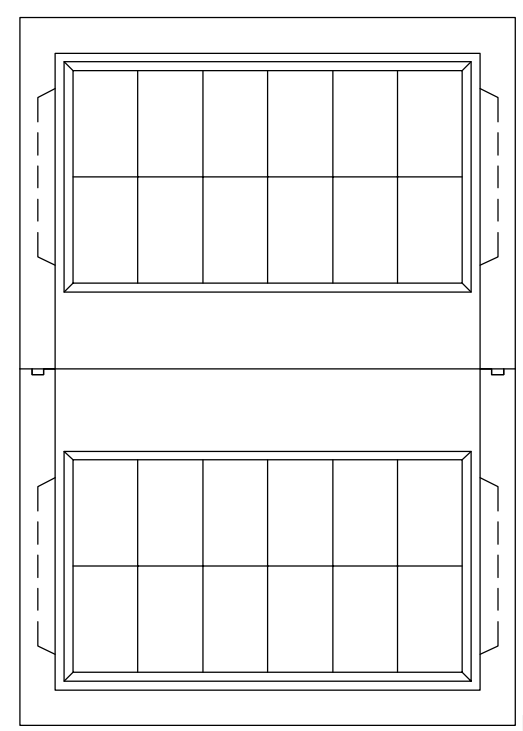

WALL 2 ELEVATION

6'-0" x 12'-0" x 9'-0" STANDARD PRECAST CONCRETE BG&E MANHOLE

THIS DRAWING CONTAINS INFORMATION PROPRIETARY TO OLDCASTLE PRECAST. THIS DRAWING IS DISCLOSED WITH THE UNDERSTANDING THAT IT WILL BE RETAINED IN CONFIDENCE & ITS USE LIMITED SOLELY TO THE PURPOSE FOR WHICH IT IS DISCLOSED. IT IS UNDERSTOOD THAT NO REPRODUCTION OF THIS DRAWING IS AUTHORIZED & THAT IT WILL BE RETURNED TO OLDCASTLE PRECAST ON DEMAND.

CUSTOMER IS RESPONSIBLE TO VERIFY THAT INFORMATION SHOWN ON SHOP DRAWING(S) IS IN COMPLIANCE WITH MOST RECENT PROJECT DOCUMENTS & FIELD CONDITIONS.

NOTE: PRODUCTION WILL NOT COMMENCE UNTIL RECEIPT OF SIGNED APPROVED SHOP DRAWING(S).

Oldcastle Precast Rotondo
MANUFACTURERS OF QUALITY PRECAST CONCRETE PRODUCTS
5115 MASSAPONAX CHURCH RD.
FREDERICKSBURG, VA. 22407
PHONE: 540.898.6300
FAX: 540.898.2389

DRAWN BY: R.A.H.	DATE: 3/19/08	SCALE: 3/8" = 1'-0"	JOB NO.
APPROVED BY:	DATE:	PROJECT: 6'-0" X 12'-0" X 9'-0" PRECAST CONCRETE BG&E	
CUSTOMER:		SHEET NO. 1 OF 1	FILE NAME 6X12X9-MH.BGE.DWG